Your Solutions Partner

Installation and Operation Manual

DUKE FLEXBAKE 5™ PROOF AND BAKE OVEN WITH WIFI CONNECTIVITY

Models:
5R-DBPS

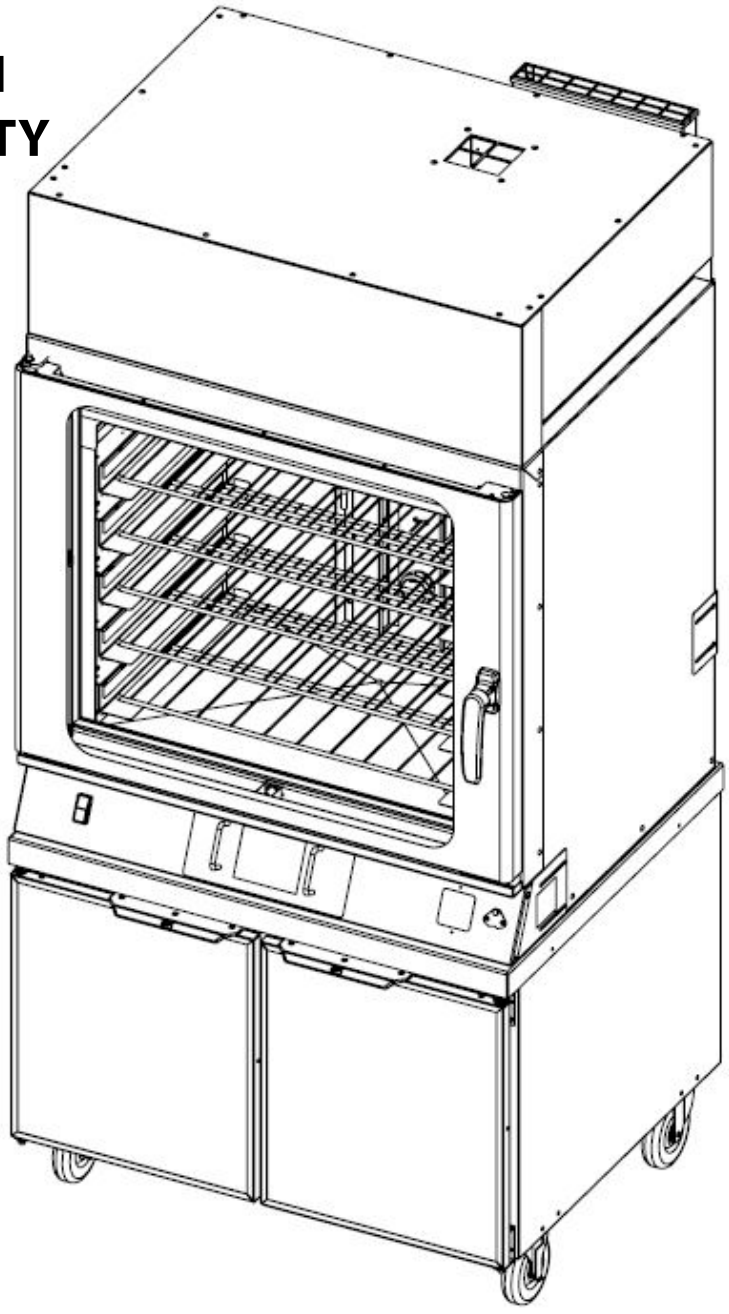

CAUTION: **Please read this manual completely before attempting to install, operate or service this equipment**

This manual is Copyright © 2021 Duke Manufacturing Co. All rights reserved. Reproduction without written permission is prohibited. Duke is a registered trademark of the Duke Manufacturing Co.

P/N 514154
REV D 02/15/2021

TABLE OF CONTENTS

Important Safety Instructions 3
Introduction 6
Specifications 7
Installation 11
Operating Instructions 16
Care and Cleaning 19
Door Adjustment & Gasket Maintenance 20
Lamp Bulb Replacement 24
Programming Controls 25
Network Configuration and Connected Operation 29
FB5 Network Trouble Shooting (FAQ) 38
Troubleshooting 41
Wire Diagram 42

IMPORTANT SAFETY INSTRUCTIONS

Throughout this manual, you will find the following safety words and symbols that signify important safety issues with regards to operating or maintaining the equipment.

⚠WARNING — **Indicates a hazardous situation which, if not avoided, could result in death or serious injury.**

⚠ CAUTION — **Indicates a hazardous situation which, if not avoided, could result in minor or moderate injury.**

CAUTION — **Indicates Important Information**

Indicates electrical shock hazard which, if not avoided, could result in death or serious injury and/or equipment damage.

Indicates hot surface which, if not avoided, could result in minor or moderate injury.

Indicates hot surface which, if not avoided, could result in minor or moderate injury. Specifically, risk of burn from heating elements.

Indicates rotating fan blade hazard which, if not avoided, could result in minor or moderate injury.

CAUTION — **Electrical shock hazard. Do not wash with water jet or hose.**

In addition to the warnings and cautions in this manual, use the following guidelines for safe operation of the unit.

- Read all instructions before using equipment.
- For your safety, the equipment is furnished with a properly grounded cord connector. Do not attempt to remove or disconnect the grounded connector.
- Install or locate the equipment only for its intended use as described in this manual.
- This equipment is intended to proof and bake bread and other bakery foods for the purpose of human consumption. No other use for this appliance is authorized.
- Do not use corrosive chemicals in this equipment.
- Do not use caustic cleaners, acids, ammonia products or abrasive cleaners or abrasive cloths. These can damage the stainless steel and plastic surfaces.
- Do not operate this equipment if it has a damaged cord or plug, if it is not working properly, or if it has been damaged or dropped.
- This equipment shall be serviced by qualified personnel only. Contact the nearest Duke authorized service facility for adjustment or repair.
- Do not block or cover any openings on the unit.
- A minimum clearance of 6" (152.4 mm) from the top of the unit to the ceiling must be provided.
- Properly rated all poles mains protection and earthing compliance with local electric codes are required for safe operation of this unit.
- Secure unit to a wall with the wall mounting brackets provided to prevent tipping.

IMPORTANT SAFETY INSTRUCTIONS - continued

- Install the Restraining Device Kit to prevent damage to mains supply connections.
- Water supply connections to the unit must comply with local plumbing code and/or standards.
- If the equipment is moved, make sure that all utility connections are properly disconnected. If the equipment is returned to its original position, make sure that any retention devices and utility connections are properly connected.
- Turn the Control Power Switch off and disconnect external all poles mains supply then allow unit to cool down before performing any service, maintenance or cleaning on the unit.
- When working on this equipment, observe precautions in this manual or labels attached to or shipped with this equipment and other safety precautions that may apply.
- Unit may start operation with inadvertent contact with touch screen display or from other extraneous sources. Disconnect external all poles mains supply should abnormal or unwanted operation occur.
- Be extremely careful when baking, loading and unloading pans, the oven interior, racks, and pans are very hot, use appropriate precautions when handling.
- Always open the oven door very slowly. Escaping hot vapors or steam can cause minor injury.
- Be careful of a possible slippery floor adjacent to this equipment.
- The procedures in this manual may include the use of chemical products. You must read the Material Safety Data Sheets before using any of these products.
- Do not store or use gasoline or other flammable vapors or liquids in the vicinity of this or any other appliance.
- Disposal of the unit must be in accordance with local environmental codes and/or any other applicable codes.
- Always keep the equipment on top of its pallet when using a fork lift or a pallet lift truck to move appliance.
- Always use a sufficient number of trained and qualified personnel only to move the appliance. Do not tilt. Appliance can tip over when being moved over an uneven floor or threshold and cause serious injury. Always apply caster brakes when not being moved.
- Do not immerse cord or plug in water.
- Keep cord away from heated surfaces.
- If the supply cord is damaged, it must be replaced by a special cord assembly available from Duke Manufacturing Co. or its service agent.

Note: Refer to the specifications data plate when ordering or replacing a cord set.

IMPORTANT SAFETY INSTRUCTIONS - continued

The following warnings and cautions appear throughout this manual and shall be carefully observed.

- Turn the unit off, disconnect the power source and allow unit to cool down before performing any service or maintenance on the unit.
- The procedures in this manual may include the use of chemical products. You must read the Material Safety Data Sheets before using any of these products.
- The unit shall be grounded according to local electrical codes to prevent the possibility of electrical shock. It requires a grounded receptacle with dedicated electrical lines, protected by fuses or circuit breaker of the proper rating, in accordance with all applicable regulations.
- Disposal of the unit must be in accordance with local environmental codes and/or any other applicable codes.
- This appliance is not intended for use by persons (including children) with reduced physical, sensory or mental capabilities, or lack of experience and knowledge, unless they have been given supervision or instruction concerning use of the appliance by a person responsible for their safety.
- CAUTION: Never use a high-pressure water wash for this cleaning procedure as water can damage electrical components
- **SAVE THESE INSTRUCTIONS**

Contains Transmitter Module FCC ID: TFB-TIWI1-01
Contains Transmitter Module IC: 5969A-TIWI101

This device complies with part 15 of the FCC Rules. Operation is subject to the following two conditions:
1. This device may not cause harmful interference, and
2. This device must accept any interference received, including interference that may cause undesired operation.

This equipment complies with radiation exposure limits set forth for an uncontrolled environment. This equipment should be installed and operated with a minimum separation distance of 20cm between the radiator (enclosed antenna) and your body.

This device is granted for use in Mobile only configurations in which the antennas used for this transmitter must be installed to provide a separation distance of at least 20cm from all person and not be co-located with any other transmitters except in accordance with FCC and Industry Canada multi-transmitter product procedures.

Changes or modifications not expressly approved by the party responsible for compliance could void the user's authority to operate the equipment.

INTRODUCTION

The Duke Flexbake 5™ All in One Oven was developed to simplify restaurant baking operations. Proofing and baking in one cavity eliminates the need to move bread during a cycle. This simplified process improves product consistency while allowing employees to spend less time baking.

This oven also features steam capabilities which allows for the baking of future artisan bread products. Users will also enjoy the intuitive high definition touch screen control with pre-programmed recipes that effortlessly guides them through the proofing and baking process.

Furthermore, this oven WiFi enabled. This allows for remote recipe updates, as well as, the remote availability of advanced diagnostic and performance information.

For more information on this oven, including Operations Training, as well as

your other Duke products, visit our website:

https://www.dukemfg.com/subway

For more information on utilizing the wifi technology on this oven visit:

https://connected.dukemfg.com/Subway

SPECIFICATIONS

Patent Pending
Model 5R-DBPS

Unit Weight: Oven and Stand	550 lbs / 250 kg
Shipping Weight: Carton Box	600 lbs / 272 kg
Optional Cart:	67 lbs / 30 kg

Line Supply Voltage (V a.c.)	Line Supply Frequency (Hz)	Line Phase Configuration	Branch Circuit Protection Device Rating	Total Maximum Line Current Amps (A)	Total Maximum Line Power Watts (W)
208	60	1	45 A	41	8500
208	60	3~	30 A	24.4	8700
240	60	1	40 A	35	8400
240	60	3 ~	30 A	21	8700
220-240	50-60	1		39	8500
380-415	50	3N ~		13	8500

Compliance Declaration - 5R-DBPS Flexbake 5™ Proof and Bake Oven

LISTED COMMERCIAL COOKING APPLIANCE 509L	Standard: UL197	File: KNGT.E17421	
FC	FCC Part 15 Subpart B:2017		
INDEXER COMMERCIAL APPARIEL DE QUISINE	Standard: CSA-C22.2 No. 109 ICES-003: 2017	File: KNGT7.E17421	
CLASSIFIED EPH	Standard: ANSI / NSF 4	File: TSQT.E157479	
CE IPX4	Directive 2006/95/EC: IEC 60335 1:2010, +A1:2012, + A1:2013 IEC 60335 2 42:2002 + A1:2008 IEC 60529 ED.2.2 B:2013 EN 60335-1:2012 +A11:2014 EN 60335-2-42:2003 +A1:2008 +A11:2012	Directive 89/336/EEC: EN62233:2008 EN61000-6-3:2007 EN55014-2:2015 EN 61000-6-2: 2016 EN 61000-6-4:2011	Directive 2014/53/EU: EN 301 489-1:2016 EN 301 489-17: 2009
	WEEE Directive 2002/96/EC RoHS 2011/65/EU		

DOMESTIC UNIT

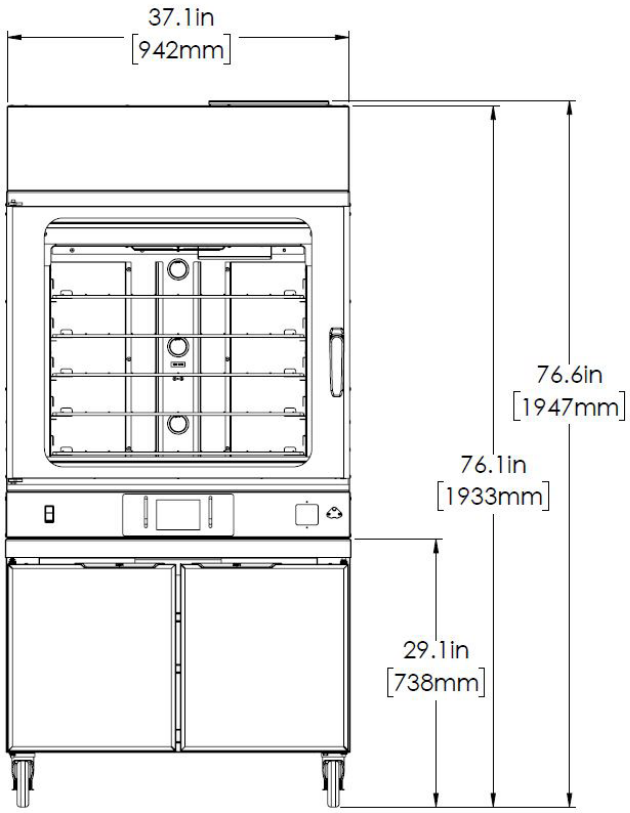

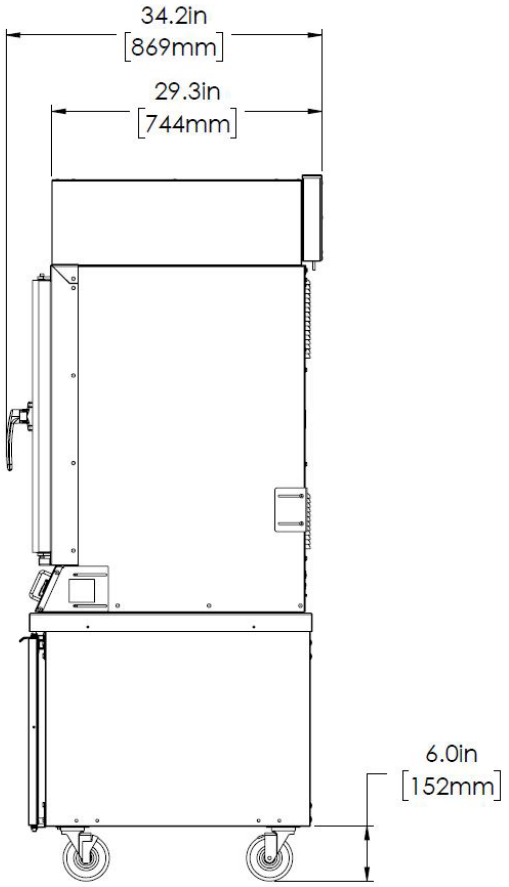

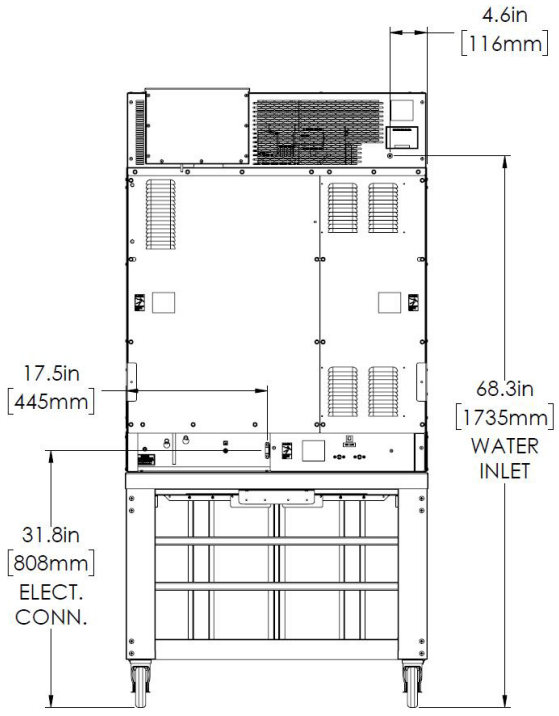

CE UNIT

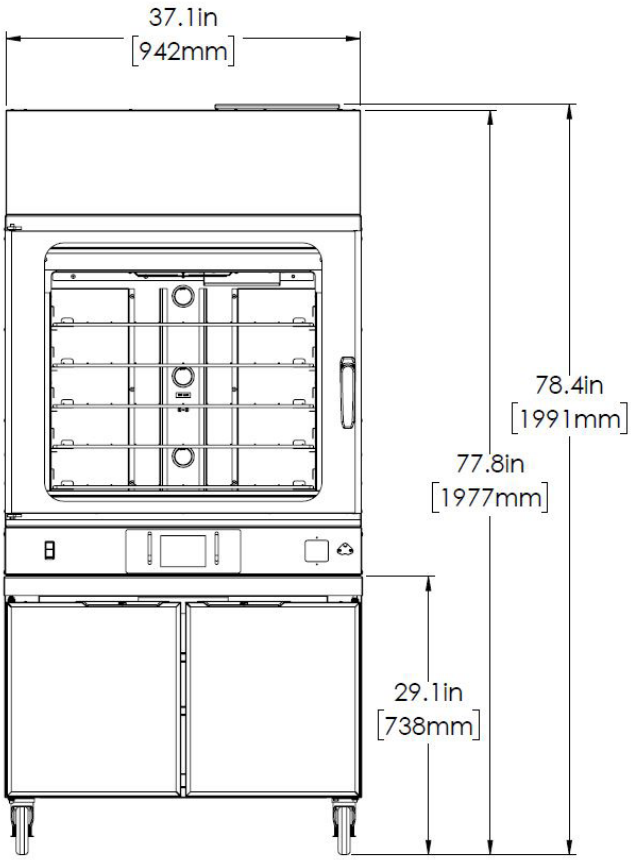
37.1in
[942mm]
78.4in
[1991mm]
77.8in
[1977mm]
29.1in
[738mm]

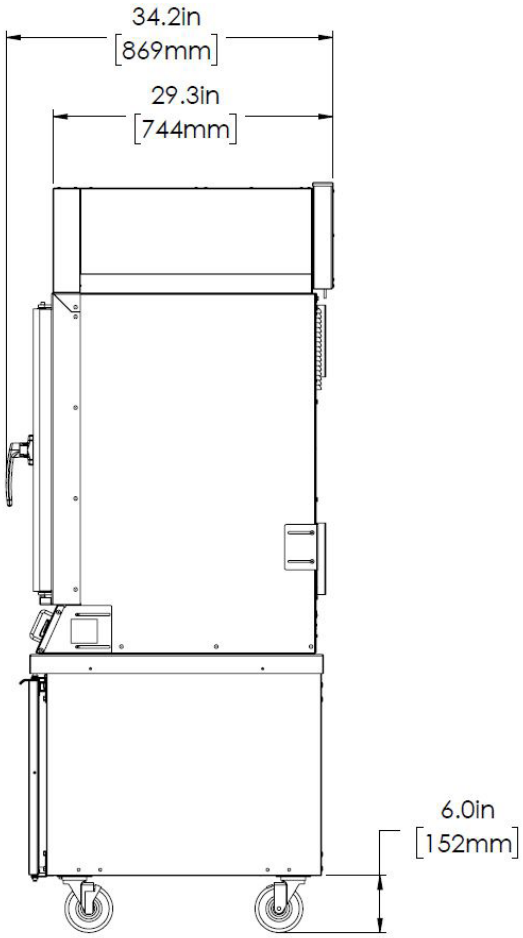
34.2in
[869mm]
29.3in
[744mm]
6.0in
[152mm]

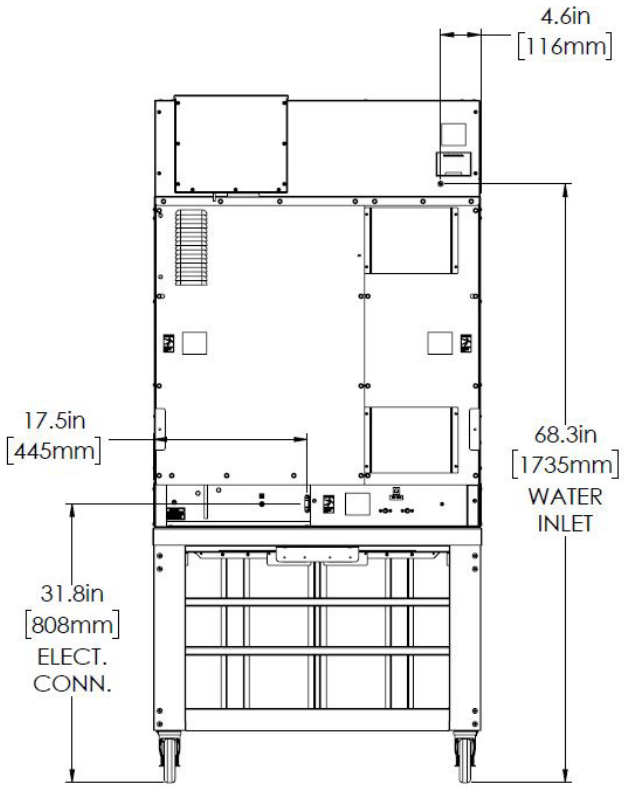
4.6in
[116mm]
17.5in
[445mm]
68.3in
[1735mm]
WATER
INLET
31.8in
[808mm]
ELECT.
CONN.

MAIN FEATURES

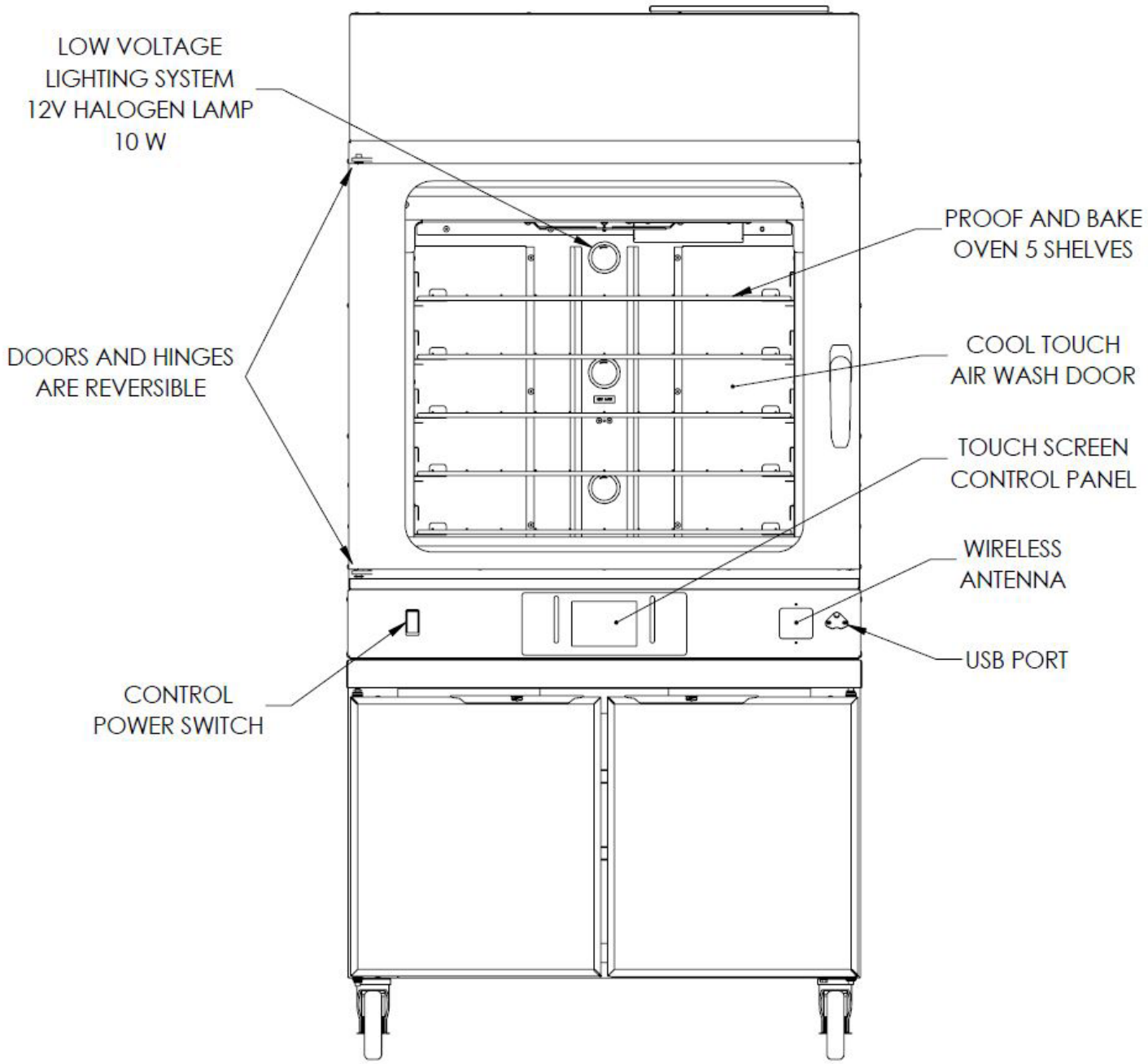

INSTALLATION

⚠WARNING

ELECTRICAL SHOCK HAZARD UNIT MUST BE SAFETY GROUNDED, EARTHED.

DO NOT MODIFY, DEFEAT ELECTRICAL CONNECTIONS OR ALTER PLUG.

ELECTRICAL CONNECTIONS

⚠WARNING BEFORE CONNECTING THE UNIT TO THE POWER SOURCE, VERIFY THAT THE VOLTAGE AND PHASE OF THE POWER SOURCE ARE IDENTICAL TO THE VOLTAGE AND PHASE INFORMATION ON THE DATA LABEL.

⚠WARNING ELECTRICAL AND GROUNDING CONNECTIONS MUST COMPLY WITH THE APPLICABLE PORTIONS OF THE NATIONAL ELECTRICAL CODE AND/OR OTHER LOCAL ELECTRICAL CODES.

⚠WARNING DO NOT STORE OR USE GASOLINE OR OTHER FLAMMABLE VAPORS OR LIQUIDS IN THE VICINITY OF THIS OR ANY OTHER APPLIANCE.

⚠WARNING THE CONTROL POWER SWITCH ON THE APPLIANCE IS FOR STANDBY POWER ONLY. FOR ALL-POLE DISCONNECT REMOVE PLUG FROM WALL OUTLET OR DISCONNECT EXTERNAL ALL POLES MAINS SUPPLY.

UNPACKING UNIT

Inspect the shipping carton and/or container, carefully noting any exterior damage on the delivery receipt; also note any damage not evident on the outside of the shipping container (concealed damage). Contact the carrier immediately and file a damage claim with them. Save all packing materials when filing a claim. Freight damage claims are the responsibility of the purchaser and are not covered by the warranty.

- Follow the instructions on the Carton Box for unpacking the unit.
- Inspect unit for damage such as, broken glass, etc.
- Report any dents or breakage to source of purchase immediately.
- **Do not attempt to use unit if damaged.**
- Remove all materials from unit interior.
- If unit has been stored in extremely cold area, wait a few hours before connecting power.

UNIT PLACEMENT

- Do not install unit next to source of heat, such as deep fryer, etc.
- Install unit on level surface floor.
- Minimum Clearance of 6" (152mm) must be maintained between the unit and any combustible substance.
- Maintain a minimum clearance of 2 inches (50 mm) on both sides and the rear of the unit for proper operation and cooling.

NOTE: The space above the oven should be open to the full ceiling height and have suitable ventilation or a hood to remove heat and humidity.

Connection of the unit to the mains supply **MUST** be performed by an authorized person in accordance with codes, standards, and laws governing the installation site using properly rated all poles mains protection, all poles mains disconnects, safety ground earthing, and shall be a minimum of 48" (1.2 meter) long to allow the equipment to be moved.

USA and non-EU Countries must use flexible conduit within variances that may be required by local electric codes or regulations.

INSTALLATION-continued

European Union (CE) installations must use HO7RN-F, 5G flexible cordage for 3N~ units and 3G flexible cordage for 1~ units per the following table;

Rated current of appliance (A)	Minimum nominal cross-sectional area of conductors (mm²)
13	2,5
39	6

The Mains Supply safety / earth ground wire must be longer than mains conductors at the unit's interconnections to prevent stress under pull.

Contact Duke for service of IVS (Integrated Ventilation System) supply interconnection.

EXTERNAL EQUIPOTENTIAL

Terminal provides a connection for bonding to equipment enclosure.

WATER SUPPLY CONNECTION

This equipment must be installed in accordance with all applicable federal, state, and/or local plumbing codes having jurisdiction.

NOTE: The Duke Flexbake 5™ Proof and Bake Oven must be supplied with water from a Reverse Osmosis (RO) System.

The water inlet utilizes ¼" (6.35mm), OD plastic tubing. Install the tubing in a manner to ensure there are no kinks, strains, or tight bends. Leave sufficient length to allow unit movement for service and cleaning.

The tubing should be cut square and be free of any deformations at the connection points. All burrs and sharp edges should be removed for proper connection.

Insert the tubing through the compression fitting with the threads pointing towards the end of the tubing.

Push the tubing into the fitting as far as it will go and tighten the nut with a 9/16" (12.7mm), wrench. Do not over-tighten the nut. If leaks occur, further tighten the fitting until the leakage stops.

DRAIN TUBING CONNECTIONS

Packaged and shipped inside the oven is a drain tubing kit. Locate this tubing assembly and install as shown in the Figures below.

STEP 1 Push the two 1/2" (12.7mm) ID x 5/8"(15.9mm) OD tubes onto the 1/2" (12.7mm) OD stainless steel drain tubes. The tubing assembly should be flush with the back of the oven and stand. Install a 5/8" (15.9mm) snap-grip (ratchet) tube clamp on each tube and tighten with a pair of pliers to prevent any leaks.

STEP 2. Push the 1/4" (6.35mm) ID x 3/8" (9.53mm) OD tubing fully onto the open barb on the 'T' fitting.

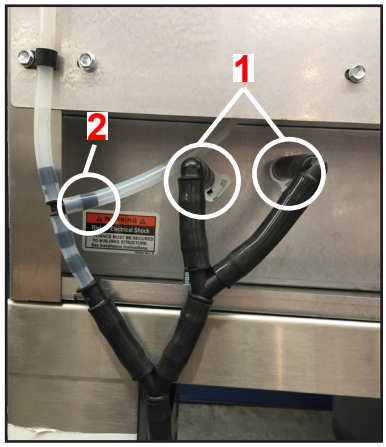

STEP 3 Push the 1/4" (6.35mm) ID x 3/8" (9.53mm) OD tubing onto the 1/4" (6.35mm) OD drain tube on the upper vent box. Install a 3/8" (9.53mm) snap-grip (ratchet) tube clamp on the tube and tighten with a pair of pliers to prevent any leaks.

STEP 4 Install the 2 loop clamps onto the 1/4" (6.35mm) ID x 3/8" (9.53mm) OD tubing and secure it with the existing screws.

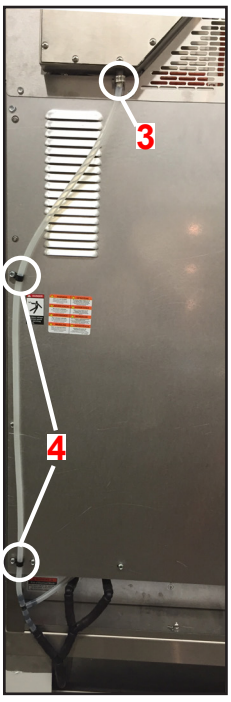

INSTALLATION-continued

STEP 5 Route the loose end of the 1/2" (12.7mm) ID x 5/8" (15.9mm) OD tube over the top horizontal brace on the back of the stand and toward the front of the unit. From the front, route the tube into the locating hole on the top of the drain pail handle.

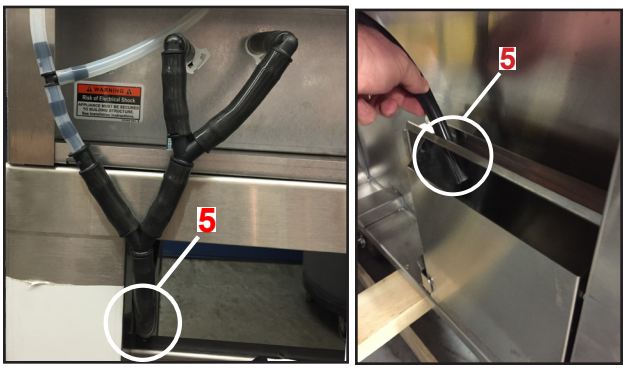

STEP 6 Inspect the tube routing and make sure there are no kinks in the tubing.

INSTALLATION

STEP 1 This unit can be converted to other mains supply configurations by Duke Manufacturing approved service personnel. Call Duke Service Department for action if electrical rating tag information is not compatible with the available mains supply.

STEP 2 This unit is supplied with the national and international specified water supply interconnection. Local regulation variances or additional requirements must be evaluated prior to installation. New water supply line interconnection must be used when installing this unit. Maximum / minimum supply pressure specification is 65PSI (448kPa) / 40PSI (275kPa) for all system plumbing components. See **INSTALLATION OF REVERSE OSMOSIS (RO) SYSTEM** section prior to water supply interconnect.

⚠WARNING

HAZARDOUS VOLTAGE
RISK OF ELECTRIC SHOCK

DISCONNECT EXTERNAL ALL POLES MAINS SUPPLY TO SERVICE

THIS RESTRAINING DEVICE MUST ALWAYS BE CONNECTED WHEN THE APPLIANCE IS IN SERVICE. DISCONNECT ONLY FOR SERVICING AND/OR CLEANING, THEN RECONNECT WHEN THE APPLIANCE HAS BEEN RETURNED TO ITS NORMAL POSITION.

STEP 3 This appliance must be secured to building structure. A restraining device kit (#153586) provided with the unit limits the movement of the appliance without transmitting stress to the mains supply. Installation instructions are in the kit.

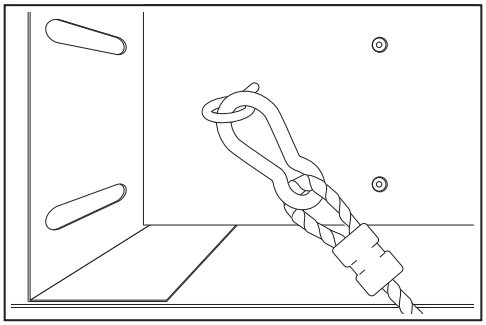

Figure: Restraining Device Kit (Part # 153586)

STEP 4 IMPORTANT: A minimum clearance of 6" (152mm) must be maintained between the unit and any combustible material. Maintain a minimum clearance of 2 inches (50 mm) on both sides and the rear of the unit for proper operation and cooling.

STEP 5 Check the swing of the door. The hinge side can be changed by referring to the **Reversing Oven Door Swing Direction section of this manual.**

STEP 6 Check the door seal and make sure both doors close completely. If they do not close and seal properly, refer to the **Door Gasket Adjustment section of this manual.**

STEP 7 Place the wire racks in the oven.

STEP 8 Secure unit to a wall with the wall mounting brackets provided to prevent tipping. Refer to **Installation of Wall Mounting Brackets** section of this manual.

INSTALLATION-continued

INSTALLATION OF WALL-BRACKETS

NOTE: Verify interconnections and function prior to installing optional wall brackets

STEP 1 Mount the Wall Mounting Brackets with screws provided with the Proof and Bake Oven.

STEP 2 Extend the Wall Mounting Bracket towards the wall by sliding it through the slot provided but do not tighten the screws.

STEP 3 Mark the Wall and Drill holes for the wall anchors.

STEP 4 Insert the wall anchors into the holes.

STEP 5 Position the Wall Mounting Brackets against the wall.

STEP 6 Insert the screws into the Wall Mounting Bracket.

STEP 7 Ensure that the Brackets are firmly against the wall and tighten the screws securely.

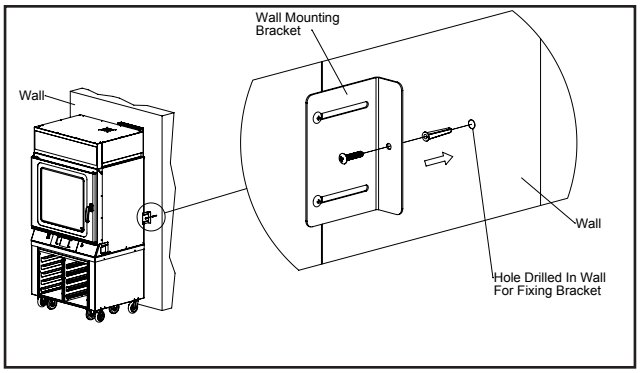

TECHNICAL DESCRIPTION AND APPLICATION NOTES FOR DUKE FLEXBAKE 5™ PROOF AND BAKE OVEN BACKFLOW PREVENTER SYSTEM

Check with your local authority having jurisdiction regarding approvals for connecting the Duke Flexbake 5™ Proof and Bake Oven to a potable water supply before making any plumbing connections. Plumbing code requirements vary, but European Union (CE) and other jurisdictions require a backflow prevention device that is factory-installed or available as a kit (P/N 600187). The backflow prevention device used on Duke Flexbake 5™ Proof and Bake Oven protects water supply systems by preventing the reverse flow of non-potable water into the potable domestic water system. The device consists of two independently acting check valves, internally force-loaded to a normally closed position and designed/constructed to operate under intermittent or continuous pressure conditions. The two main components of the Duke backflow preventer system are:

- Dual Check Valve type backflow preventer that conforms to ANSI/ASSE standard #1024 and is CSA standard B64.6 certified.
- Inlet water strainer equipped with 100-mesh screen and installed up stream of the backflow preventer. The screen is conveniently located below the backflow preventer, for easy access during cleaning/replacement.

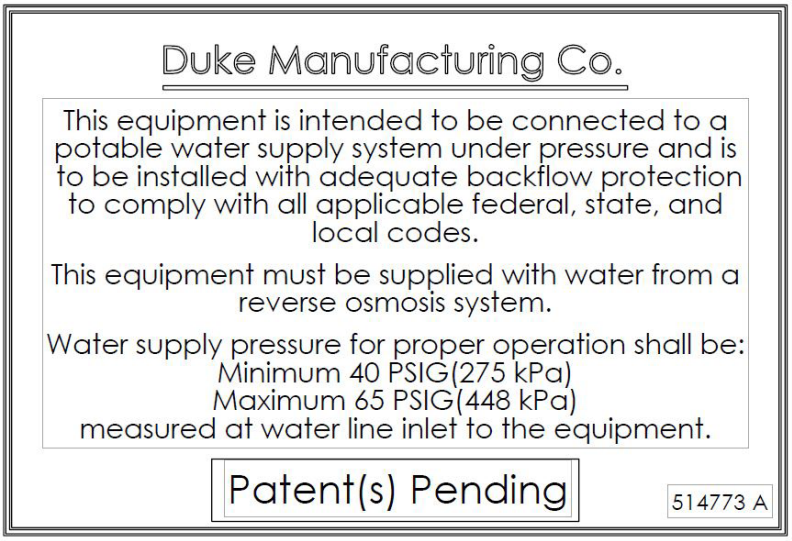

INSTALLATION-continued

PROOF AND BAKE OVEN START-UP

⚠WARNING

ELECTRICAL SHOCK HAZARD.

TASKS MUST BE PERFORMED BY A QUALIFIED SERVICE TECHNICIAN OR ELECTRICIAN.

STEP 1 Have a qualified service technician or electrician connect the Proof and Bake Oven to the mains supply.

STEP 2 Turn control power on to the unit with the control power switch on the left side of the control panel. Boot Screen is displayed and automatically transitions to the Main Screen.

STEP 3 Turn the oven ON by touching the button located at the lower left of the touch screen. The buttons and screen will turn to BLUE background. The Oven lights will turn on and start preheating.

Figure: Main Screen

STEP 4 Select a proof and bake recipe (Full Bake) and verify operation. The unit will automatically begin a conditioning cycle. Allow approximately 30 minutes for it to complete. When the conditioning cycle is complete, the display will change to the Oven Recipe Ready to Start screen.

STEP 5 Check the door seal and make sure the door closes completely.

STEP 6 If the unit does not power up correctly or if the door does not close and seal properly, call Duke for assistance.

AUDIBLE ALARMS

The Proof and Bake has various audible alarms.

1 chirp	Keystroke acknowledgment
3 triple chirps	Oven ready (up to temperature) notification
Continuous rapid beeps (continuous until cleared)	Oven door open alarm
2 long beeps (continuous until cleared)	Oven end of cycle
Triple beeps (continuous until cleared with door cycle or touching "Add Cheese NOW" message)	Add Cheese Time Alarm (2 min. prior to end of Proof Cycle)
3 triple chirps (repeating every minute until cleared)	Reminder: Start Bake
3 short beeps (with message persistent for 1 minute)	20 min. Alarm (prior to end of bake, alert to retard next load of bread)
3 short beeps	End of bake 2 min alarm

OPERATING INSTRUCTIONS

Oven/Proofer Start-Up

Turn ON the Duke Flexbake 5™ Control Power Switch

Boot Screen

Automatically Transitions to Main Screen

Recipe Name

Touch

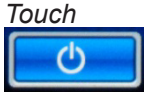

to turn on the Oven

Baking Main Screen

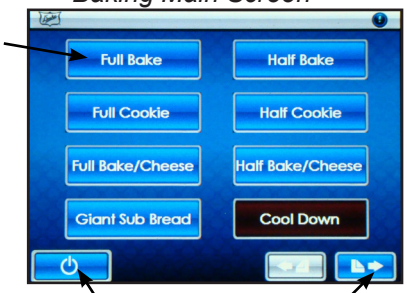

Power Button *Next Page*

Touch Screen Definitions and Notifications

Main Tool Bar

Screen Sleep Button Info Button*
** Screen Sleep Button only available when Oven is off*

Recipe Information Bar (Default - Off*)

** See Owner's Manual to turn On`* *Recipe Temp* *Recipe Time*

Door Open

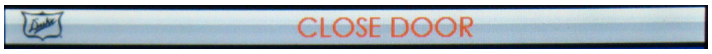

With oven door open, CLOSE DOOR will flash in the Main Tool Bar.

Empty Drain Water Pan

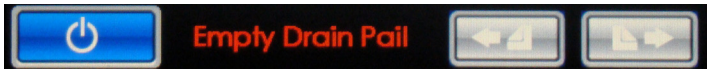

The Operator will be notified to empty drain pan each time the oven is turned on and after every 3rd Cool Down Cycle.

Start Bake Reminder

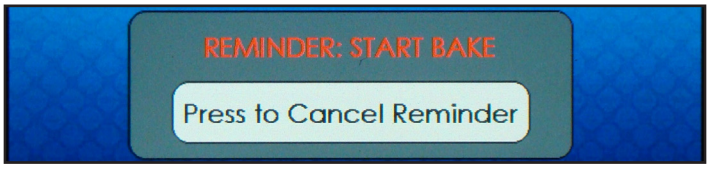

A start bake reminder message and alarm will alert the operator if the recipe timer has not been started 1 min. after bread has been loaded.

Add Cheese Alarm

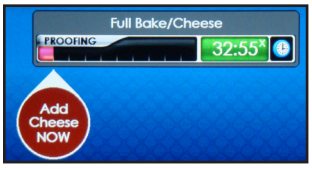

At 2:00 min remaining in the proof cycle, an alarm will beep to alert the operator to add cheese (ADD CHEESE NOW).
Note: Full Bake with Cheese or Half Bake with Cheese recipes only.

20 min. Alarm (Default - On*)

*A bake complete in 20 min. message and alarm will alert the operator to retard the next load of bread for optimized baking throughput. * See Owner's Manual to turn Off*

Cancel Recipe

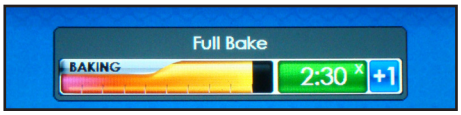

To cancel, press and hold countdown timer for 2-3 seconds.

Oven Cool Down

Select Cool Down, to rapidly cool the oven and condition it for another Proof and Bake Recipe. If Cool Down is not selected after a recipe, and a bread recipe is selected, the oven will automatically default to Cool Down.

Check Faults

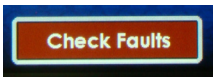

A Check Faults message will alert the operator if a fault has been detected. Touching Check Faults displays fault messages with more detailed descriptions.

Recipe Run Screen ***Diagnostics***

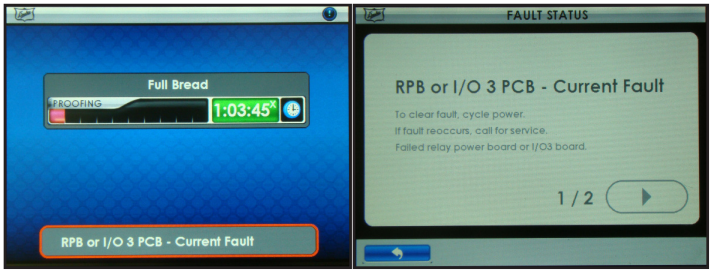

OPERATING INSTRUCTIONS - continued

DAILY PROOF AND BAKE OVEN START-UP

STEP 1 Turn control power on to the unit with the control power switch on the left side of the control panel. Boot Screen is displayed and automatically transitions to the Main Screen.

STEP 2 Turn the oven ON by touching the button located at the lower left of the touch screen. The buttons and screen will turn to BLUE background. The Oven lights will turn on and start preheating.

Figure: Main Screen

STEP 3 Check to make sure that the oven fan is running.

STEP 4 Open the oven door; the oven fan should stop.

STEP 5 Close the door; the fan should resume.

STEP 6 Select your desired recipe. If this is a proof and bake recipe, allow the oven to preheat and condition for at least 30 minutes. An audible alarm will sound (3 short chirps) when the oven reaches the ready state. Your Duke Flexbake 5™ Proof and Bake Oven is now ready to operate.

If there are any problems refer to the Trouble Shooting section of this manual.

OVEN OPERATING INSTRUCTIONS

STEP 1 Turn the oven ON by touching the button. The oven lights will turn on and the Oven will start preheating.

Figure: Main Screen

STEP 2 Select your desired RECIPE button. If a bake only recipe (i.e. Cookies) is selected, the Oven will continue to preheat. If a proof and bake recipe (i.e. Full Bake) is selected, the Oven will automatically begin a conditioning cycle. Allow approximately 30 minutes for the oven to preheat and condition.

Figure: Oven Recipe Preheat Screen (if under temp. set point for bake only recipe; i.e. Cookies):

Figure: Recipe Conditioning Screen (if oven is not conditioned for proof and bake recipe; i.e. Full Bake):

OPERATING INSTRUCTIONS - continued

STEP 3 Once the preheat or conditioning cycle is complete, the display will change to the Oven Recipe Ready to Start screen. An audible alarm will sound (3 triple chirps) when the oven reaches the ready state.

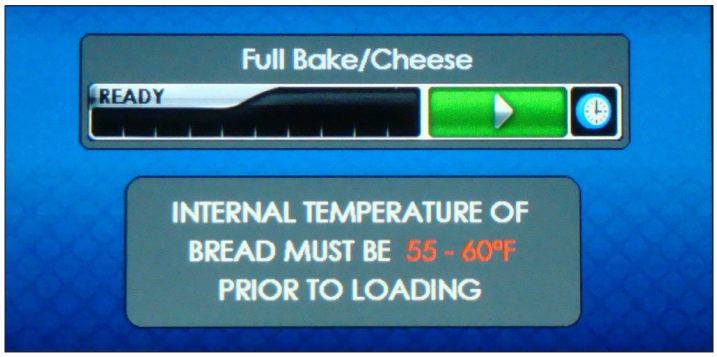

Figure: Oven Recipe Ready to Start

STEP 4 Load the oven with dough and touch the start timer button. The remaining time will be displayed in the button area and the progress bar will change to visually show elapsed and remaining bake time.

NOTE: You can cancel an active timer with press and hold for 2 to 3 seconds on the count down timer.

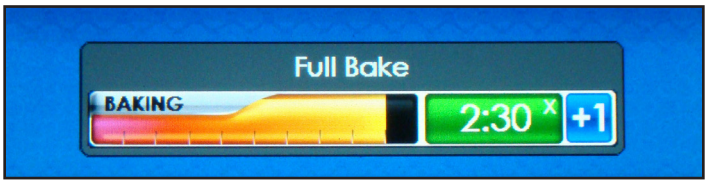

Figure: Oven Count Down Timer

STEP 5 With 4 minutes remaining in the proof cycle, a pop-up message will be displayed with an option to add +5 minutes to achieve desired bread size.

Figure: 5 Minute Pop-up

STEP 6 If a bake with cheese recipe was selected, at 2:00 minutes remaining in the proof cycle an alarm will beep (triple beeps) to alert the operator to add cheese. Add Cheese Now will be displayed. Touch the Add Cheese Now message or open the door to cancel the alarm.

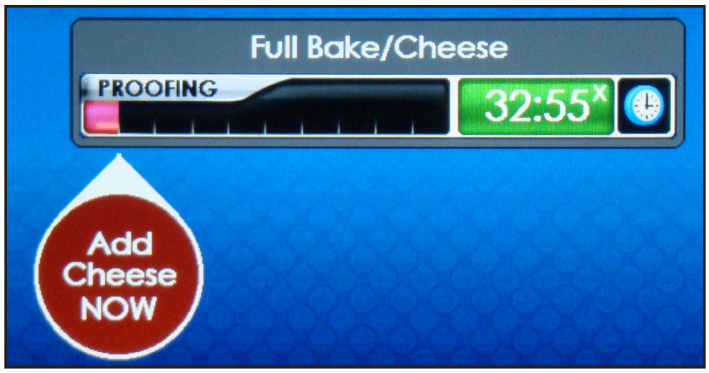

Figure: Cheese Time Alarm

STEP 7 At 20 min. remaining in the bake, a bake complete in 20 min. message and alarm will alert the operator to retard the next load of bread for optimized baking throughput.

Figure: Retard Next Load Alarm

STEP 8 When the bake is complete, an alarm will beep to alert the operator. Touch the Timer 0:00 or open the oven door to cancel the alarm.

NOTE: At 2:00 minutes remaining in the bake, an alarm will beep to alert the operator.

Figure: Oven Bake Complete Alarm

STEP 9 You can add 1 minute to baking time by touching the +1 button adjacent to the count down timer. This can be done at any time during the bake or at the end of a baking cycle. You must add time in 1 minute increments.

STEP 10 Adjust the time, if necessary, depending on type of dough and desired results.

STEP 11 If the next bake is a Proof and Bake recipe, select the Cool Down cycle to rapidly cool the oven.

STEP 12 Once the Cool Down cycle is completed, select the desired recipe (i.e. FULL BAKE) to condition the oven for the bake.

STEP 13 When the oven is ready, the Oven Recipe Ready to start screen will be displayed.

OPERATING INSTRUCTIONS - continued

BAKING TIPS

- Always select the oven recipe and allow preheat time prior to loading product. Only load when the Oven Recipe Ready to Start Timers screen is displayed. Load the oven with ten pans of dough and touch the start button.
- If the bread color is uneven, reduce temperature and extend bake time in recipe (see Programming Controls).
- If the bread is too dark, reduce the bake time in the recipe (see Programming Controls). If the bake time is reduced and the bread is still too dark, reduce the temperature by 15° F (10° C) and bake longer.
- When baking partial loads, start loading on the center shelf and work up and down from the center.
- Opening oven door allows heat to escape. Under normal conditions, quick loading and unloading will not be a problem. If door is left open too long, oven performance will be affected.

CARE AND CLEANING

⚠WARNING

OVEN INTERIOR AND RACKS ARE VERY HOT AND COOL SLOWLY.

ALLOW TO COOL BEFORE HANDLING.

⚠ CAUTION

ELECTRICAL SHOCK HAZARD:

DO NOT WASH WITH WATER JET OR HOSE.

CAUTION

DO NOT USE OVEN CLEANERS, CAUSTIC CLEANERS, DEGREASERS, ACIDS, AMMONIA PRODUCTS, ABRASIVE CLEANERS, STEEL WOOL, OR ABRASIVE PADS CONTAINING IRON. THESE CAN DAMAGE THE STAINLESS STEEL, DOOR GASKETS, PLASTIC SURFACES AND SENSORS.

DAILY CLEANING INSTRUCTIONS

1. Pour a large cup of hot water through the cavity bottom drain to flush any bread crumbs or seasoning from drain line.
2. Empty drain water pan.
3. Clean Drip Tray with clean damp cloth.
4. Clean stainless steel exterior with stainless steel cleaner or polish, or with hot soapy water followed by a clean water rinse.
5. Clean oven doors with a glass cleaner.
6. Clean oven interiors with a damp cloth. If heavy soil areas exist clean with hot soapy water and follow with clean damp cloth.

WEEKLY CLEANING INSTRUCTIONS

1. The Cool-Touch door has two window panes. The inner window can be easily separated from the outer window for cleaning. This is achieved by unlatching two clips and rotating the inner window on its hinges. After cleaning, the inner window frame is easily clipped to the outer window by squeezing the two windows together. For additional detail refer to "Cool- Touch Door Information" section of this manual.
2. Inspect oven door gaskets for cuts, tears or any other damage. Refer to the section on "Door Adjustments and Gasket Maintenance" for directions.

MONTHLY CLEANING INSTRUCTIONS

1. Check door screws for tightness.
2. Check the door gasket seal on the oven for leaks. Refer to the section on "Door Adjustments and Gasket Maintenance" for directions.

DOOR ADJUSTMENT & GASKET MAINTENANCE

REVERSING OVEN DOOR SWING DIRECTION

⚠WARNING

Note: Reversing oven door requires two (2) people.

Step 1 Open oven door. Remove the lower hinge pin retaining ring (FIG 1).

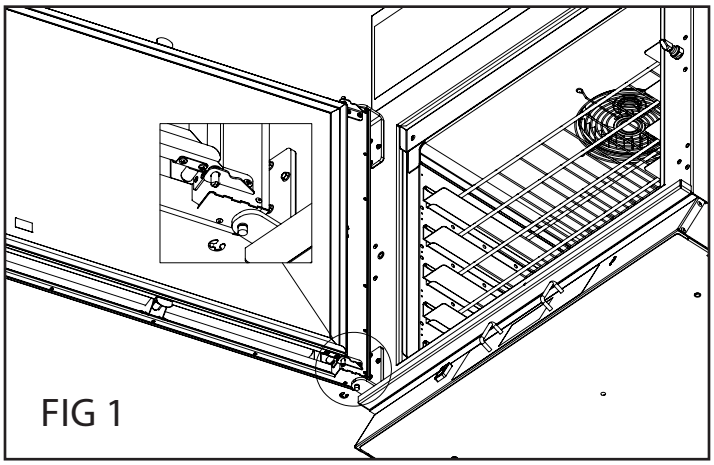
FIG 1

Step 2. Using an assistant to support the door, remove the hinge pin and the door from the oven (Fig. 2).

NOTE: Take care to not lose upper/lower bushings.

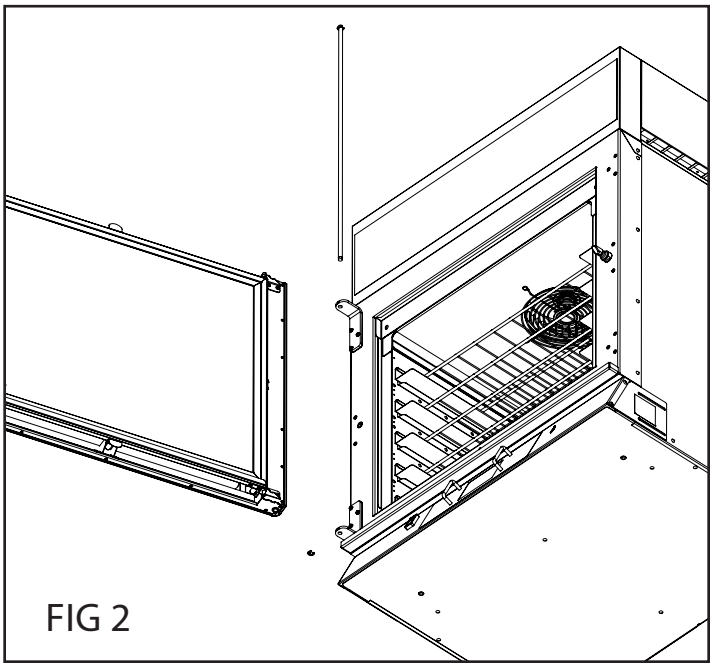
FIG 2

Step 3. Remove the six pan head screws on the front of the oven to expose the hinge screw holes for the other swing direction (Fig. 3).

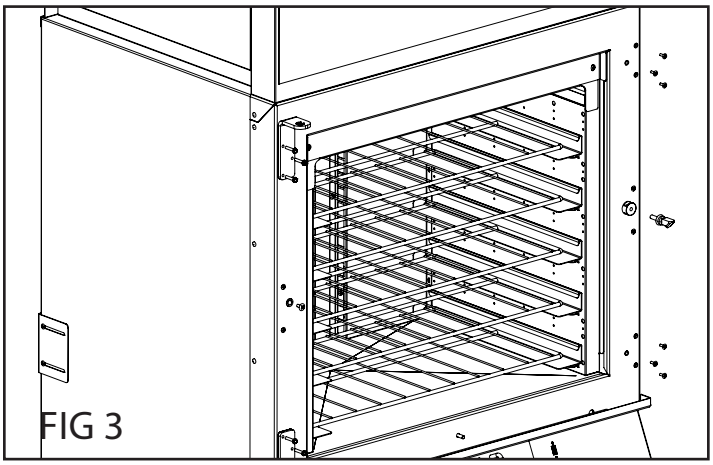
FIG 3

Step 4. Remove the six screws that hold the upper and lower hinges to the front of the oven. Move the hinges to the other side and reattach using these hex head screws. (FIG 3 and 4) **NOTE: The hinge pin hole in each hinge should be toward the outer edge of the oven. Leave these loose enough for the hinge to float to ease assembly and alignment.**

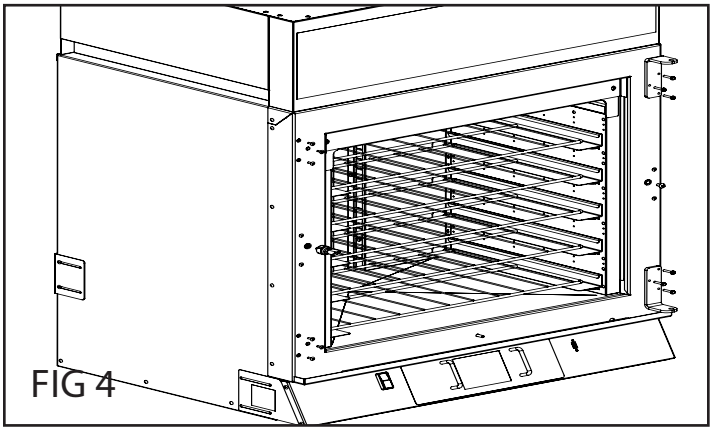
FIG 4

Step 5. Use the six pan head screws removed in step 3 above to fill the unused hinge screw holes on the front of the oven.

Step 6. Remove the latch strike and locking jam nut from the front of the oven and move it to the other side. Remove the M8 pan head screw from the other side (opposite the strike) to fill the original strike screw hole. **NOTE: To remove the strike, first loosen the locking jam nut. (FIG 3 and 4)**

DOOR ADJUSTMENT & GASKET MAINTENANCE -cont.

Step 7. Remove the 2 screws securing the door latch plastic housing cover. Remove the 1 screw securing the tab for supporting the plastic housing cover. Remove the 3 screws securing the door latch handle assembly to the door. Rotate the handle 180 degrees and reassemble. Move the tab to the opposite side and reattach. Reassemble the plastic housing cover. (FIG 5 and 6)

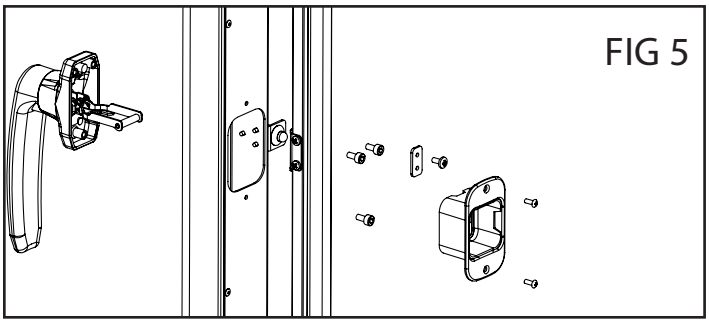
FIG 5

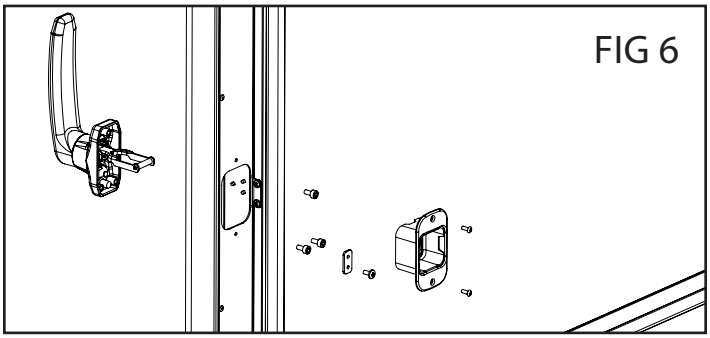
FIG 6

Step 8. Using an assistant, hold the door in place and reattach door to hinges with the hinge pin. **NOTE: Make sure the upper and lower bushings are properly in place.** Reinstall the lower hinge pin retaining ring. (FIG 7 and 8)

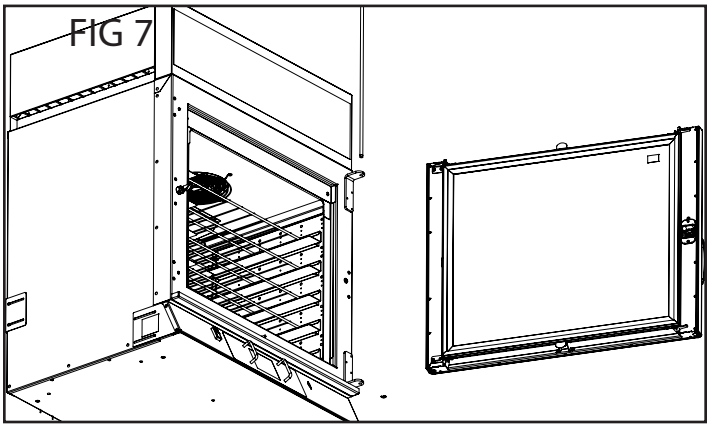
FIG 7

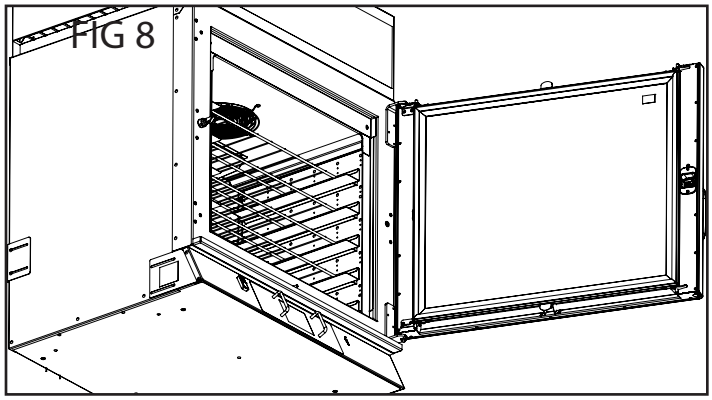
FIG 8

Step 9. Still using an assistant, make sure the door is level with the oven body and that the door latch roller is in contact with the strike upper catch surface (FIG 9) then tighten the hinge screws permanently. (FIG 10).

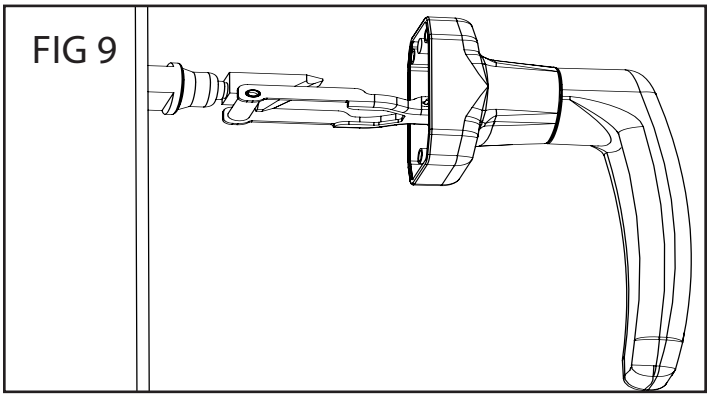
FIG 9

Step 10. Refer to the DOOR GASKET LEAK TEST section of this manual to verify the proper seal of the door gasket.

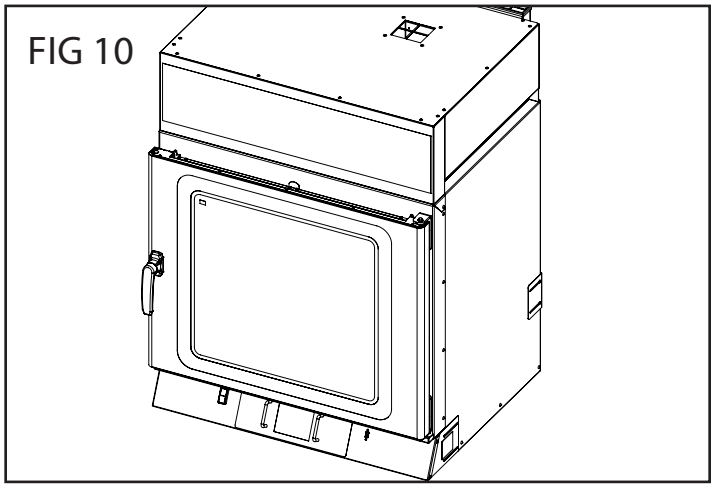
FIG 10

DOOR ADJUSTMENT & GASKET MAINTENANCE -cont.

DOOR GASKET LEAK TEST:

The doors should be checked for leaks every three months. If the door gasket is damaged or compressed permanently, it should be replaced. **Call Duke Manufacturing Co. at 800-735-3853 to order a new gasket.**

To check the gasket for leaks, close the door with a currency bill between the gasket and front of the oven. Resistance should be felt when pulling the currency bill out with the door closed. Do this check in several places.

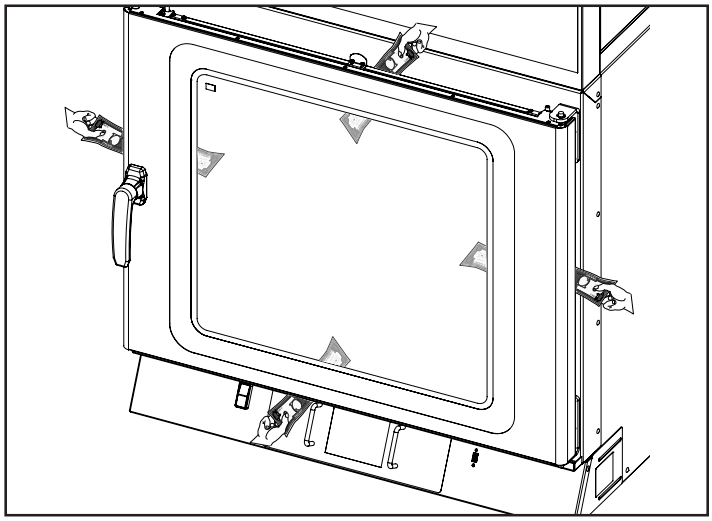

Figure: Gasket Check

GASKET REPLACEMENT:

Step 1 Remove the old gasket by pulling it out of the groove in the door frame.

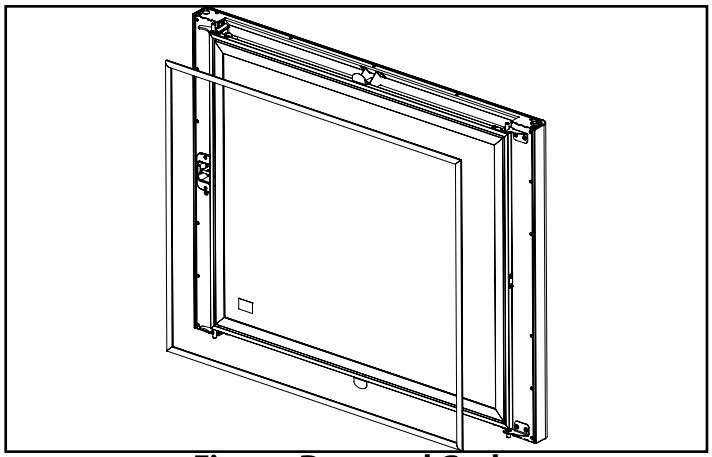

Figure: Door and Gasket

Step 2 Clean the groove with a screwdriver or other flat-bladed tool to remove any dirt or gasket pieces.

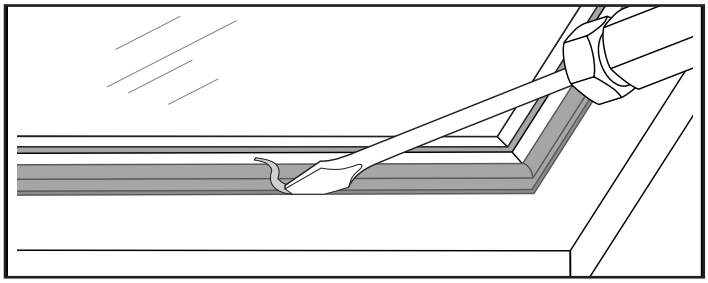

Figure: Cleaning Gasket Groove

Step 3 Press the new gasket into the groove. Make sure it is fully seated in the groove and flat against the door frame.

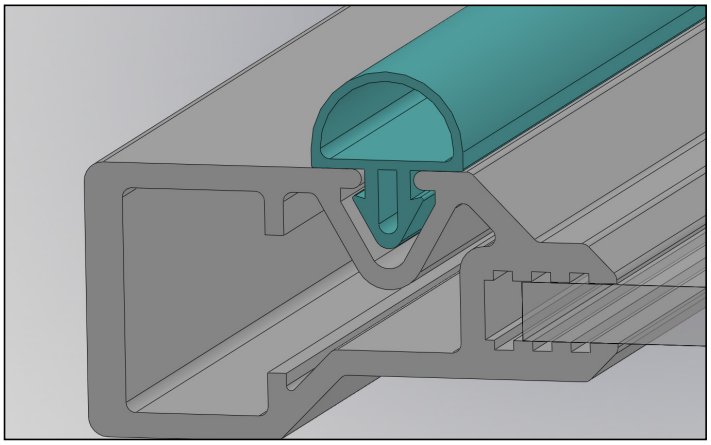

Figure: Properly Seated Gasket

Step 4 Refer to Figure: Gasket Check in this section to check the gasket for leaks. Also, check that the new gasket is not compressed too much, making the door hard to close. Call Duke Service for assistance if the gasket does not seal properly.

DOOR ADJUSTMENT & GASKET MAINTENANCE -cont.

COOL-TOUCH DOOR INFORMATION AND CLEANING INSTRUCTIONS

The Cool-Touch door has two window panes. The inner window can be easily separated from the outer window for cleaning. This is achieved by unlatching two clips and rotating the inner window on its hinges. After cleaning, the inner window frame is easily clipped to the outer window by squeezing the two windows together.

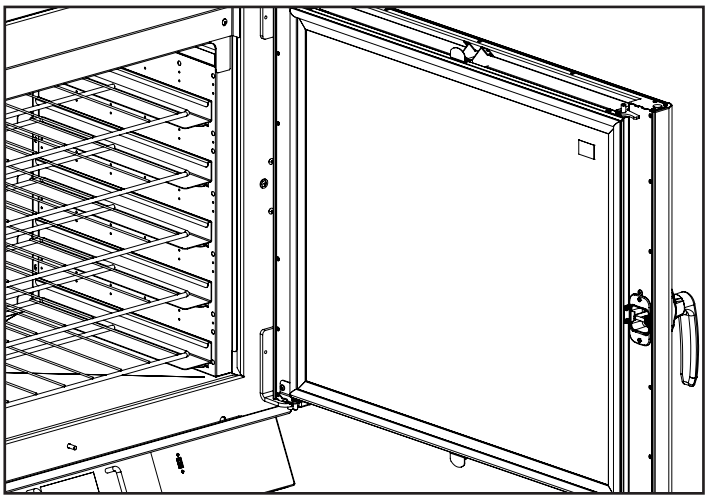

Figure: Cool-Touch Door inside view.

Step 1 To open the windows for cleaning, unlatch the top clip.

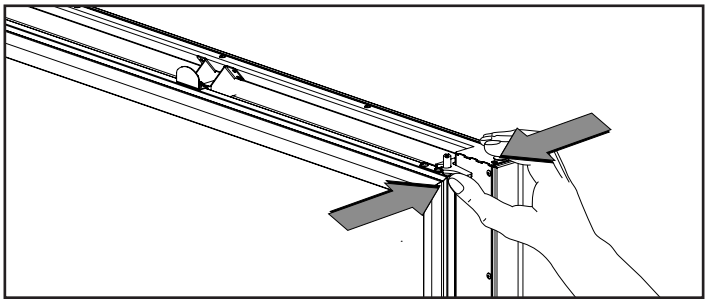

Figure: Unlatch Top clip

Step 2 Unlatch the bottom clip.

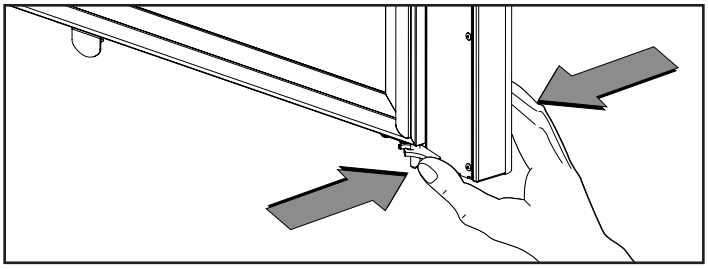

Figure: Unlatch Bottom Clip

Step 3 Cool-Touch Door bottom easily swings open for cleaning.

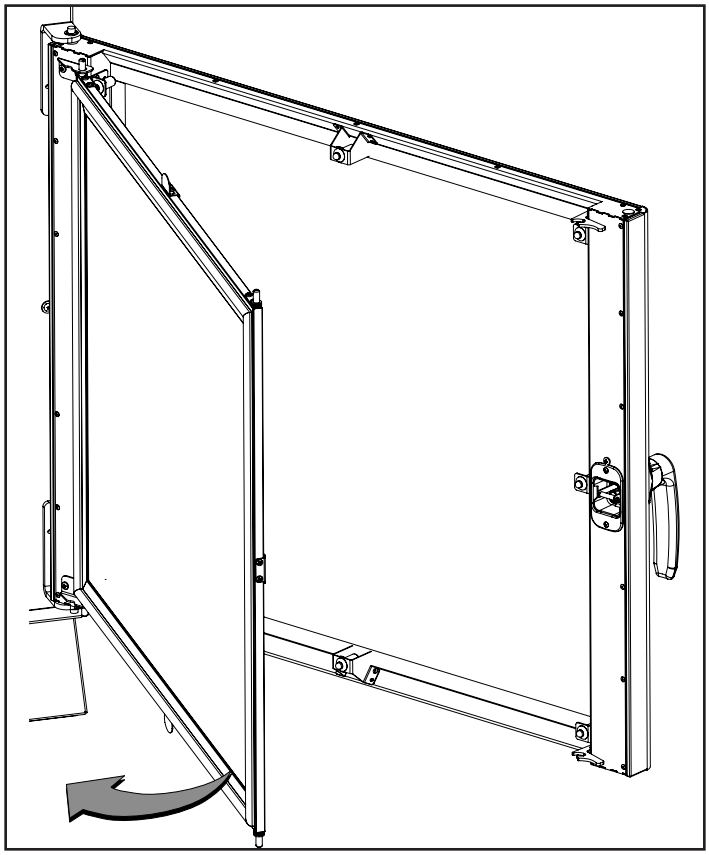

Figure: Door Swings Open for Cleaning

Step 4 Cool-Touch inner door is easily clipped to the outer door by squeezing them together

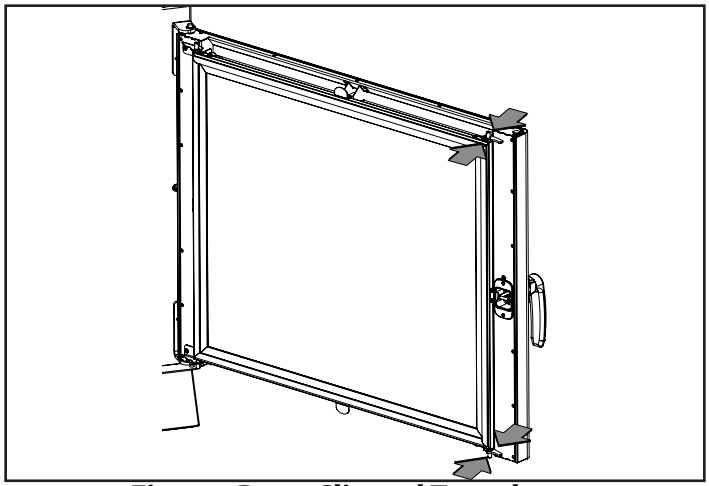

Figure: Door Clipped Together After Cleaning

LAMP BULB REPLACEMENT

BULB MOUNTING DETAILS

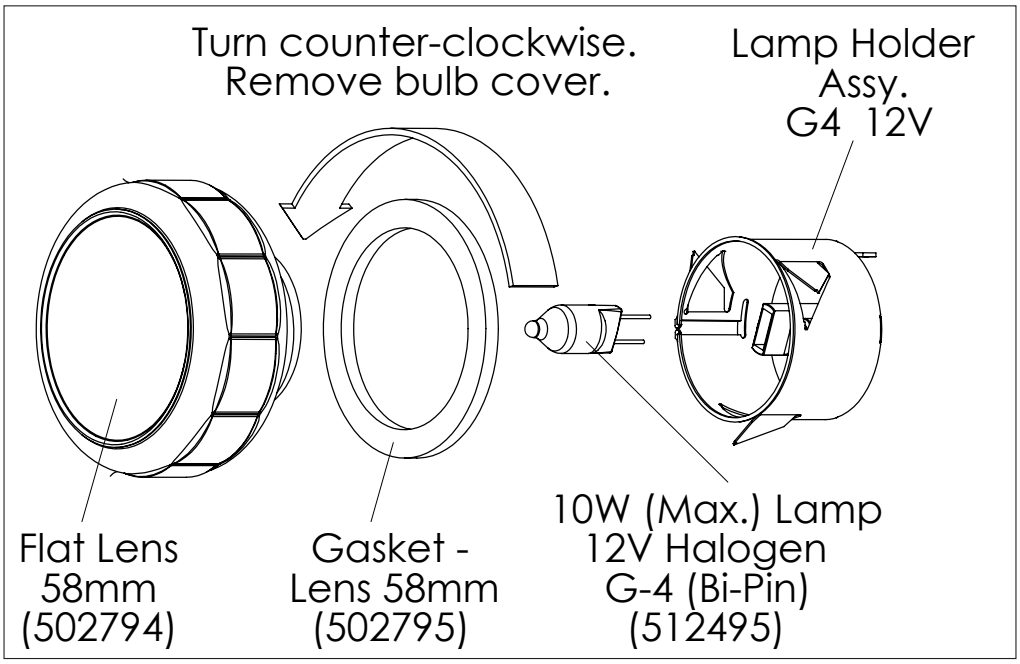

Figure: Halogen Lamp Assembly

CAUTION

DO NOT TOUCH LIGHT BULBS WITH BARE HANDS AS OIL/FINGERPRINTS WILL SHORTEN THE LIFE OF THE BULB. USE A CLEAN GLOVE OR CLOTH TO HANDLE BULBS.

1. Disconnect external all poles mains supply and allow to cool.
2. Remove the light lens and gasket by turning it counter clockwise.
3. Remove the burned out bulb.
4. Using clean gloves or a cloth, install the new lamp bulb (Halogen Lamp G4, 12 V, 10 W Maximum) into the lamp holder.
5. Replace light lens and gasket ensuring it is fully seated and tightened or leaks will occur.

PROGRAMMING CONTROLS

To access the SPECIAL FUNCTIONS, touch button on the Main Tool Bar.

Figure: Main Tool Bar

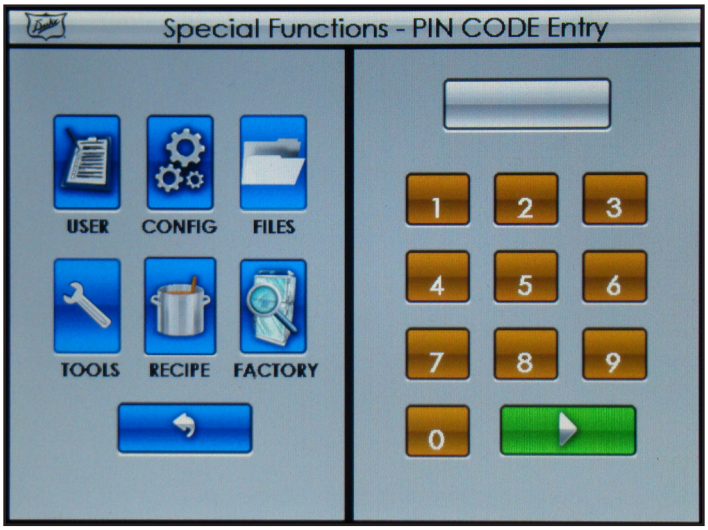

Figure: Special Functions Screen

RECIPE EDIT PROGRAMMING INSTRUCTIONS

NOTE: Your Duke FlexBake 5™ oven has been factory configured with the standard recipes. Therefore, changes to these recipes should not be needed or should be minimal; such as a fine adjustment on time for browning.

Step 1 Touch the button and then enter pin code 5 6 7 8 and Touch the button when prompted.

Step 2 Touch the button for the recipe you want to edit (i.e. FULL BAKE).

NOTE: There are 7 baking recipes and 1 Cool Down function single touch accessed from the main menu screen. There are a total of 21 recipes available on consecutive screen pages.

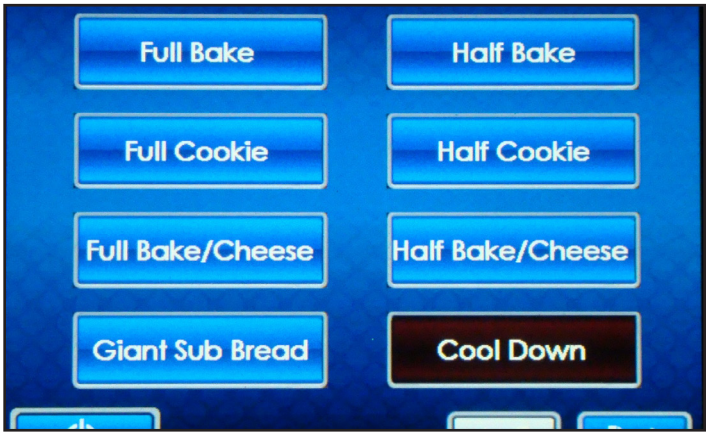

Figure: Main Screen

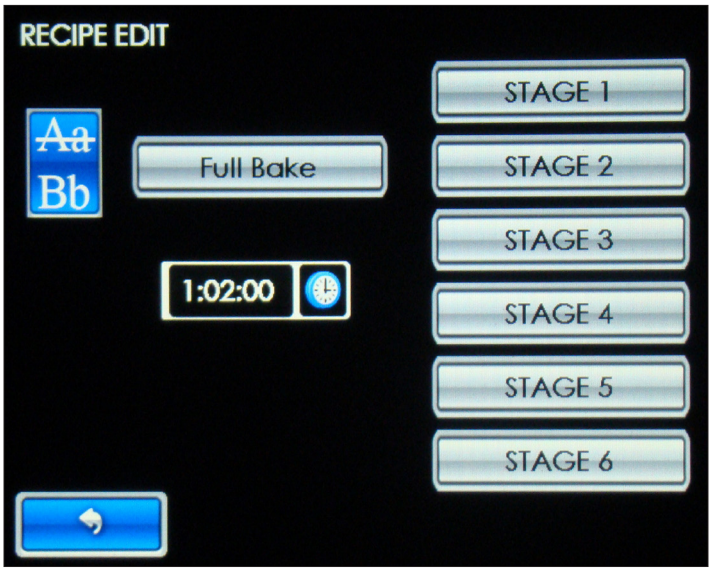

Figure: Stage Edit Selection Screen

Step 3 Touch the stage you want to edit (STAGE 1).

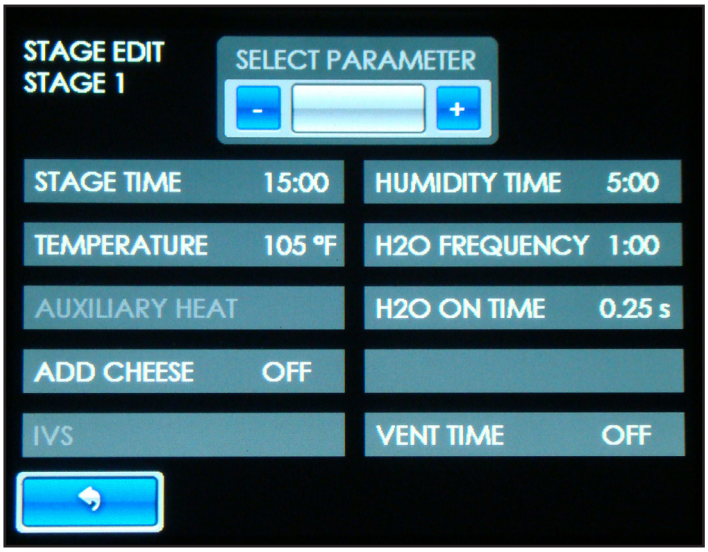

Figure: Stage Edit Selection Screen

Caution:

For proofing bread, Stage 1 temperatures should be 115°F or lower. Temperatures higher than 115°F do not require the oven to be cooled to start a recipe and automatic cool down cycle will not be initiated.

PROGRAMMING CONTROLS - continued

- Touch the parameter you want to change (Stage Time, Temperature, etc.). Adjust the value using the - and + buttons and save your changes by pressing the button.

Figure: Stage Edit Selection Screen

- STAGE TIME – Time or duration of stage.
- TEMPERATURE – Temperature set point of stage.
- AUXILIARY HEAT – Percentage of auxiliary heater power. (Only on Bake Stages)
- ADD CHEESE – Toggles between OFF and ON. Turns ON the CHEESE ALARM.
- IVS – Toggles between OFF and ON. Turns ON the IVS hood (if equipped), mm:ss from the end of the stage.
- HUMIDITY TIME – Toggles between OFF and the length of time additional humidity is added to the beginning of the stage.
- H2O FREQUENCY – Frequency or time between calls for water during HUMIDITY TIME. (1:00 is strongly recommended.)
- H2O ON TIME – Time or duration of water introduced. (0.25s is strongly recommended.)
- VENT TIME – Toggles between OFF and the time or duration of powered vent cycle from the end of the stage.

NOTE: To add a new recipe, touch a 'Blank' button. To add a stage to a new or existing recipe, touch the next consecutive 'Blank' button.

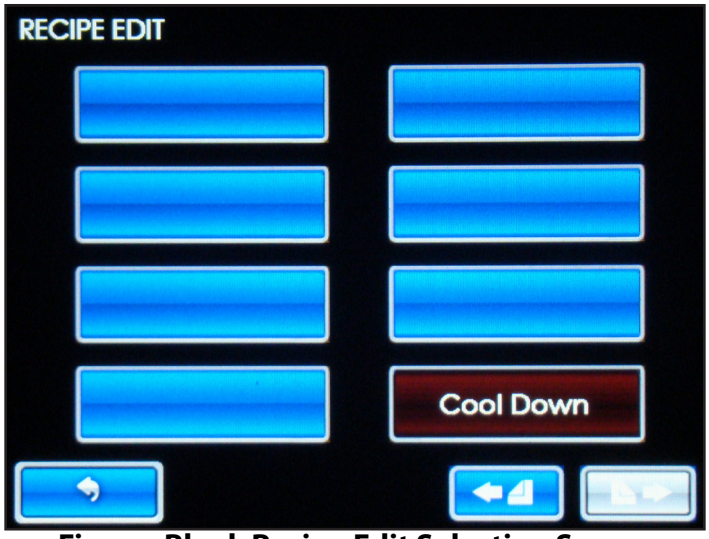

Figure: Blank Recipe Edit Selection Screen

Figure: Blank Stage Edit Selection Screen

PROGRAMMING CONTROLS - continued

Step 4 To edit the recipe name, touch the Aa Bb button for the EDIT RECIPE NAME screen.

NOTE: Typing will add letters/characters to the end of the text.

PRESS:

- Aa **TO TOGGLE THE KEYBOARD BETWEEN THE UPPER/ LOWER CASE CHARACTER SET.**
- 123, .&# AND Йä **FOR THE NUMBER AND SYMBOL KEYBOARDS.**
- spc **TO SPACE**
- clr **TO CLEAR ALL TEXT**
- del **TO DELETE/BACKSPACE**

Figure: Edit Recipe Name Screen

Step 5 Touch the button to save the changes and return to the RECIPE EDIT Screen. If no changes are required touch the button to go back to the RECIPE EDIT Screen.

NOTE: You must touch the button to save the changes you made.

Step 6 When complete, touch the button to go back to the previous screen. Press multiple times to return to the main screen.

USER (USER DOCUMENTS)

Step 1 Touch the button.

Step 2 Touch the button for the information you want to view.

- QUICK GUIDE – Overview of unit function
- PROGRAMMING – Overview of secondary function
- TROUBLESHOOT – Overview of troubleshooting steps
- FAULT STATUS – Touching will display fault status. If a fault exists, a fault message with a detailed description, instruction to clear the fault and if it reoccurs, further details of the fault and likely failed component to communicate to the service provider to better ensure an efficient repair is displayed.
- NETWORK STATUS – Touching will display unit network status.
- SYSTEM STATUS – Touching will display unit status
- CARE/CLEANING – User safety, cleaning and door gasket check instructions
- MAINTENANCE – Overview of maintenance items
- SPECIFICATIONS – Overview of unit specifications
- RECIPE USE – Touching will display recipe usage (resettable counts and 24 hr counts). Touch X to reset the counts for a specific recipe.
- CONTACT US – Contact information
- ABOUT – Software revision information

Figure: User Documents Screen

PROGRAMMING CONTROLS - continued

CONFIG (CONFIGURATIONS)

Step 1 Touch the button and then enter pin code 2 3 4 5 and Touch the button when prompted.

Step 2 Touch the button for the setting you want to edit.

- DATE/TIME – Touching will display DATE/TIME edit screen. Touch the or button adjacent to the field you want to change. Touch the button to save the changes.
- LANGUAGE – Touching will display a list of included languages. Touch the preferred language button to select.
- C/F SELECT – Touching will toggle between CENTIGRADE MODE ENABLED and FAHRENHEIT MODE ENABLED.
- DEFAULT RECIPE – Touching will reload factory defaults.
- SYSTEM STATUS – Touching will display unit status.
- DRAIN PAIL MSG – Touching will toggle between message enabled and disabled.
- 20 min. ALARM – Touching will toggle between 20 min. ALARM ENABLED and 20 min. ALARM DISABLED. A bake complete in 20 min. message and alarm will alert the operator to retard the next load of bread for optimized baking throughput.
- STATUS BAR – Touching will toggle between STATUS BAR ENABLED and STATUS BAR DISABLED.
- IVS CONFIG – Touching will toggle between NO IVS INSTALLED and IVS INSTALLED.
- S/N ENTRY - Touching will display current oven S/N stored within the control and an option to enter the S/N if missing or incorrect.
- NETWORK CONFIG – Touching will display network connection options and subsequent configuration settings screens. Refer to the NETWORK CONFIGURATION section of this manual for detailed instructions.

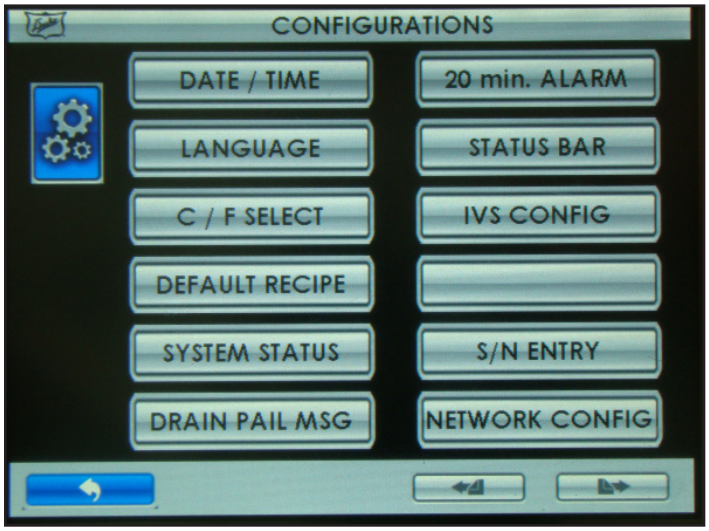

Figure: Configurations Screen

FILES (FILE MANAGEMENT)

Step 1 Touch the button and then enter pin code 3 4 5 6 and Touch the button when prompted.

- Select file operation from list and follow instruction on the display screen.
- OS UPDATE –Update the control firmware.
- DOCS LOAD – Update the embedded User Manual and graphics files.
- EXPORT RECIPES – Saves Oven Recipes to a USB Drive
- IMPORT RECIPES – Loads Oven Recipes from a USB Drive
- DATA WRITE – Reserved for future use

Figure: File Management Screen

PROGRAMMING CONTROLS - continued

TOOLS (TOOLS)

- For factory and service use only

FACTORY (FACTORY SETTINGS)

- For factory and service use only

NETWORK CONFIGURATION

OVERVIEW

This unit is capable of being a connected device. Firmware updates, recipe changes (upload and export), and diagnostic information can be provided and accessed remotely when connected. The unit can be connected via wired Ethernet Cat5e or wirelessly to the in store access point (router). The Ethernet port is located on the lower rear of the unit.

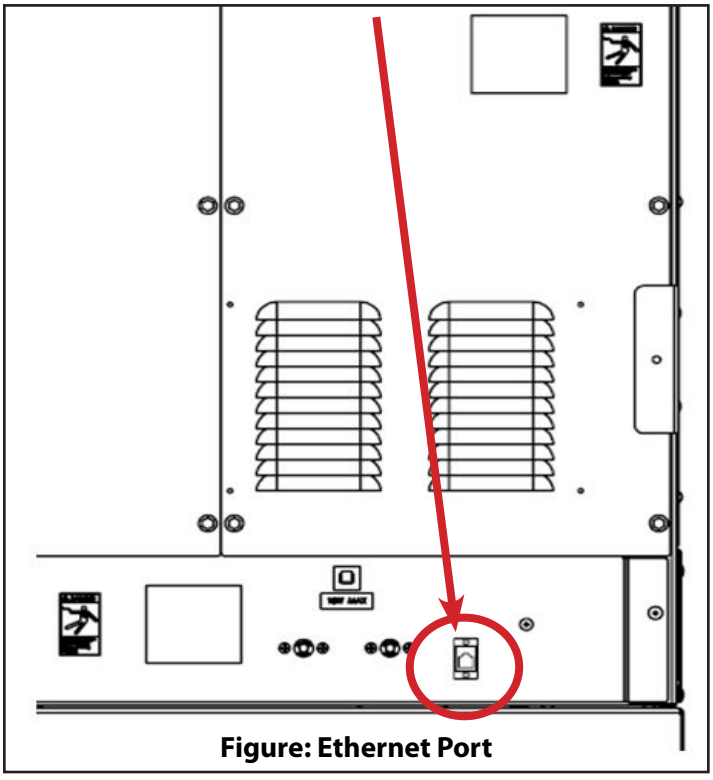

Figure: Ethernet Port

How to access these features

1. Connect your oven to your in-store network. (see Network Configuration section)
2. Create an account and register your new oven or register this oven to an existing account.

NOTE: The franchisee should create a master account for all stores, and then assign manager access, if desired.

Scan the QR code to the right or visit the website:
https://connected.dukemfg.com/Subway

NETWORK REQUIREMENTS

Duke FlexBake 5 (FB5) utilizes an internet connection to offer the following features:

- Remote recipe updates
- Remote diagnostics
- Remote firmware updates

Duke provides a cloud solution called the Duke Connected Equipment Platform to make these remote features available.
In order take advantage of these features, please ensure that the following types of internet traffic are allowed from your store IT networking and security equipment.

Network Firewalls

The FB5 has capabilities with both WiFi and ethernet networking. When you connect the FB5 to a local area network (LAN) using either of these modes, the FB5 will attempt to connect to the cloud.
If you have a network firewall in use in your location, please be sure to allow (whitelist) the following rules for the FB5 and the Duke Connected Equipment Platform website.

URL	Port	Protocol
connected.dukemfg.com	443	TCP
iot.connected.dukemfg.com	443	UDP/TCP

NETWORK CONFIGURATION - cont.

Content Filters

If you operate a restrictive content filter on your premise for controlling access to Internet Content, we request that you whitelist traffic to the following URL for access to the Duke Connected Equipment Platform.

URL

https://connected.dukemfg.com

NETWORK CONFIGURATION

To access the SPECIAL FUNCTIONS, touch button on the Main Tool Bar.

Figure: Main Tool Bar

Figure: Special Functions Screen

Step 1 Touch the button and then enter pin code 2 3 4 5 and Touch the button when prompted.

Step 2 Select NETWORK CONFIG

Step 3 Select **Ethernet**, **Wireless** or **Cancel** back to Configurations screen.

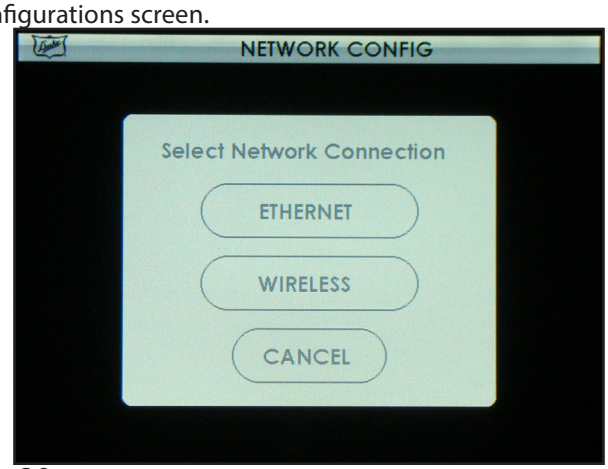

Figure: Network Configuration

a. If ETHERNET is selected, "SAVE" button sets Ethernet and DHCP mode.
Note: ADVANCED will allow setting of static IP.

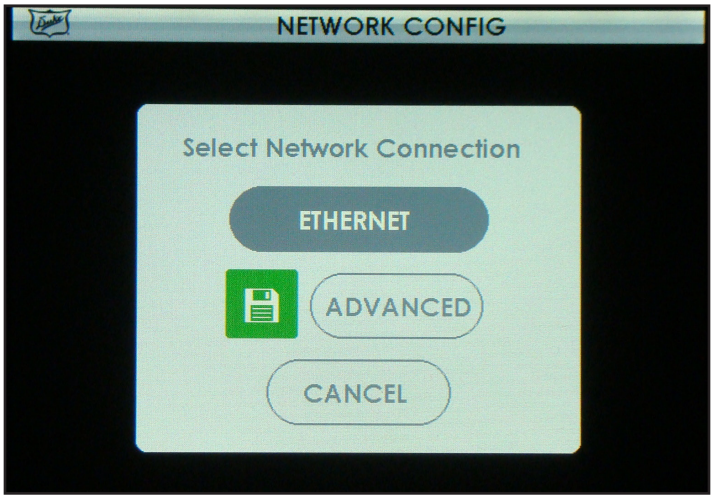

Figure: Ethernet Selection

b. Selecting **WIRELESS** will display a list of available networks (routers). Select your preferred network by touching the name in the list. The network you selected will be displayed on the wireless selection screen (for example, FBFIVE), touching the Password field allows text entry, if required.

NOTES:
If a password is required, a will be displayed on the Network List. To display additional networks available, press or the to manually enter your network name.

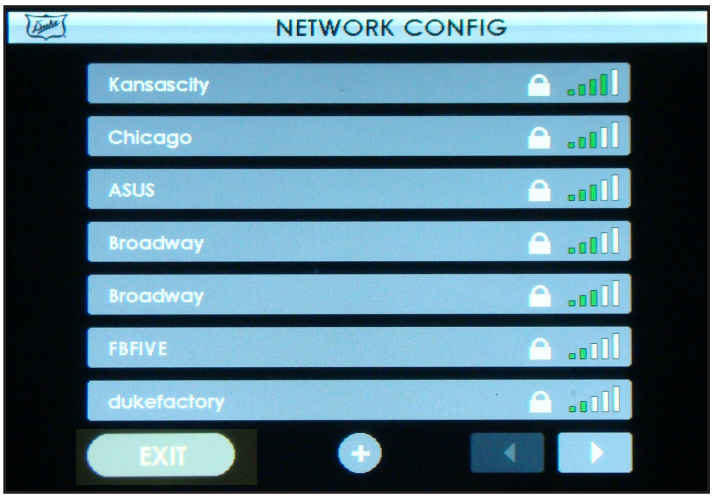

Figure: Wireless Selection

NETWORK CONFIGURATION - cont.

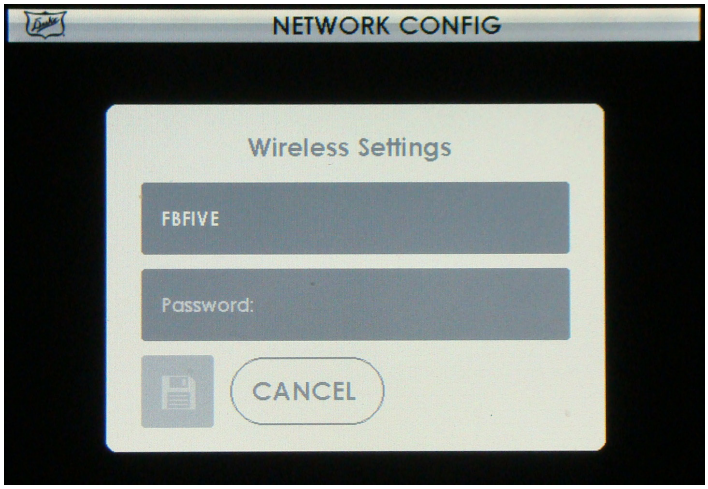

Figure: Network FBFIVE

Figure: Network Name Screen

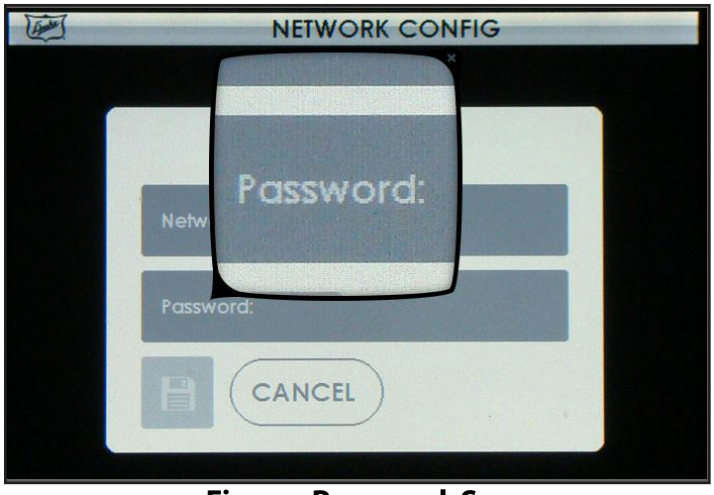

Figure: Password Screen

c. Selecting "SAVE" will set unit to Wireless DHCP mode and attempt to connect.

Note: ADVANCED will allow setting of static IP.

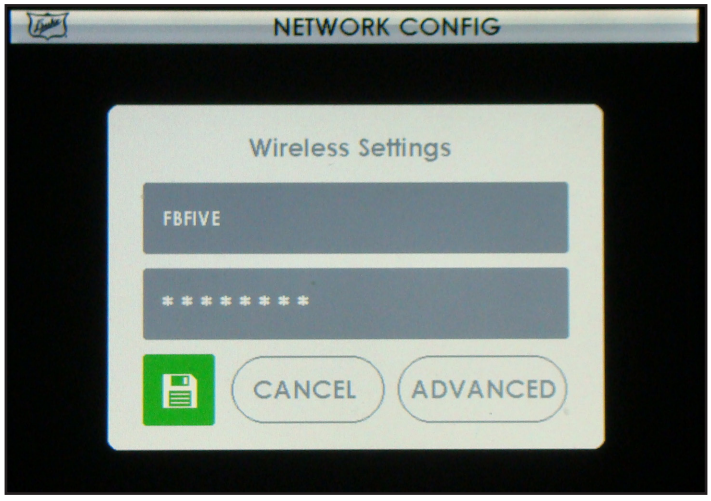

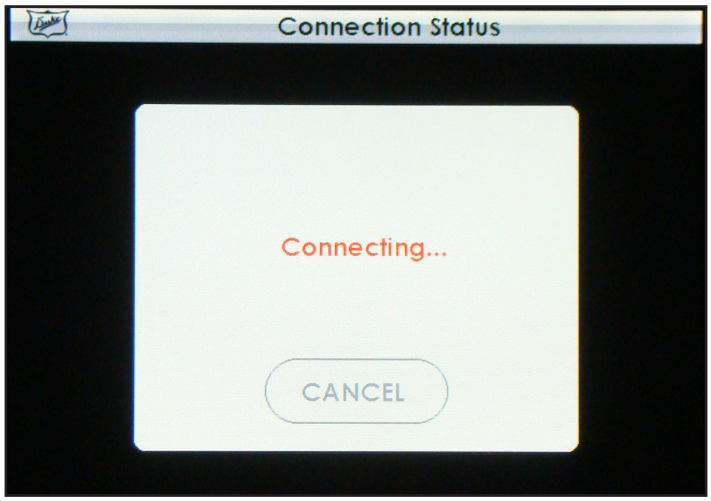

Figure: Connecting

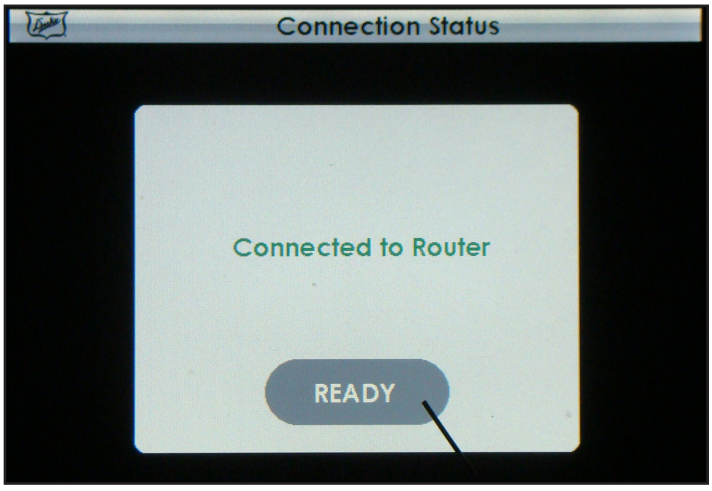

Figure: Connected

NETWORK CONFIGURATION - cont.

d. The current network configuration and connection status is shown under the USER / NETWORK STATUS screen.

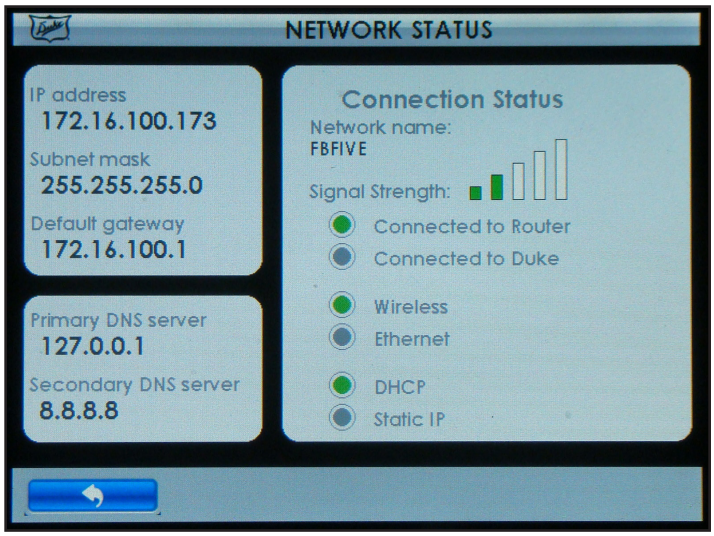

Figure: Network Status

- Green Dots or Bars - Indicate current status
- Connected to Router - Confirmed oven connection to in store router
- Connected to Duke - Confirmed oven connection to the cloud Duke Connected Equipment Platform

e. Selecting ADVANCED from either the ETHERNET or WIRELESS screen will allow setting of static IP. Touch fields and use keypad to enter address. "SAVE" button after entering address sets unit to static IP mode and attempts to connect. "CANCEL" button returns to previous screen without changing settings:

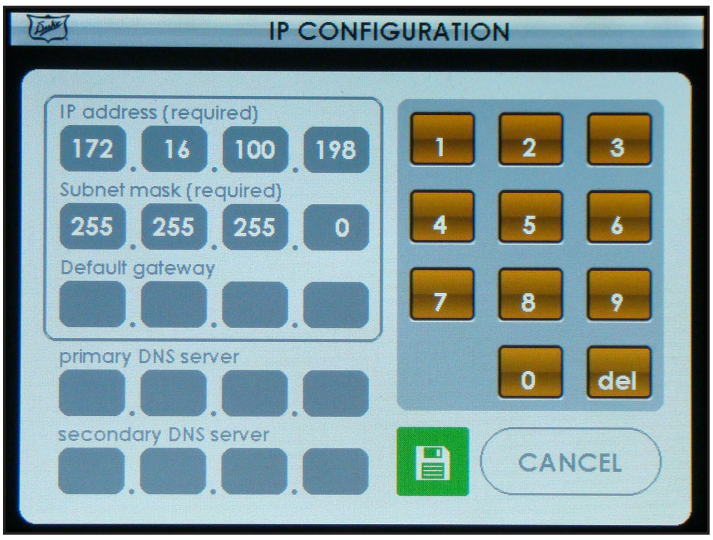

Figure: IP Configuration

CREATE ACCOUNT AND/OR REGISTER

Scan the QR code below or visit the website:
https://connected.dukemfg.com/Subway

CONNECTED OPERATION AND AVAILABLE FEATURES

OVERVIEW

Once you have an account established and the oven is registered, you will have following features available;

- Ability to remotely manage and update recipes on the oven.
- Ability to remotely view the oven status, usage data and diagnostics
- Ability to remotely receive firmware updates so your oven always has the most up to features.

NOTE: Connectivity is Optional! The oven will function as intended without connecting.

WEB APPLICATION

Once your unit is connected, you may access it remotely via a computer, tablet, or other smart device. Go to:
https://connected.dukemfg.com/Subway
on your preferred device.

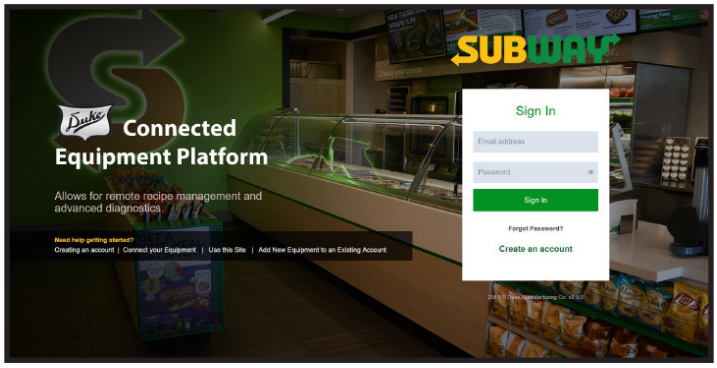

Login to your account and you will access the Web App Dashboard.

CONNECTED OPERATION AND AVAILABLE FEATURES - continued

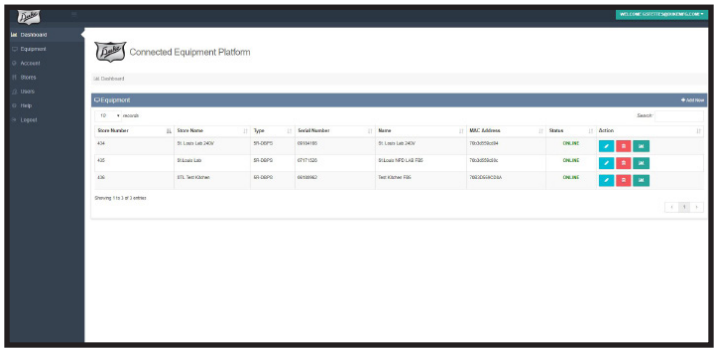

RECIPE EDITS AND CHANGES

Recipe changes to your unit can be made remotely via a Web app. These can be edits to existing recipes, new added recipes, deleted recipes, or a full new set of recipes. When a recipe change is made available to the unit, as long as a recipe is not selected (preheating, conditioning, or running), it will immediately be loaded and active. If at this instance, a recipe is currently selected (preheating, conditioning, or running), it will be loaded and active when the current selected recipe is completed. Therefore, there is no risk to interrupting a bake cycle of an oven in your store by making recipe edits and/or changes remotely via the Web app.

Step 1 Select Equipment in the left hand tool bar.
This will display all the ovens that you have access to.

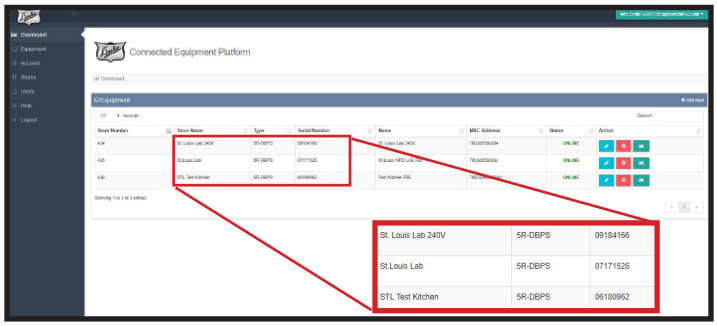

Step 2 Select the Recipes icon adjacent to the oven you want to edit and the page below will be displayed. The Stored Recipes are the recipes currently programmed in the oven. You can page through recipe screens by selecting Page 1, Page 2, etc. Manage Available Recipes allows you to upload recipes and append them to an available list or remove recipes, etc.

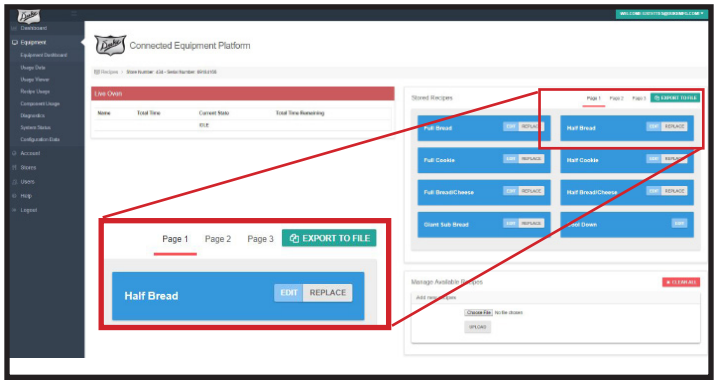

Step 3 Individual recipes can be edited by selecting EDIT on the specific recipe you wish to change. Edit the desired parameters and select **SAVE** when complete.

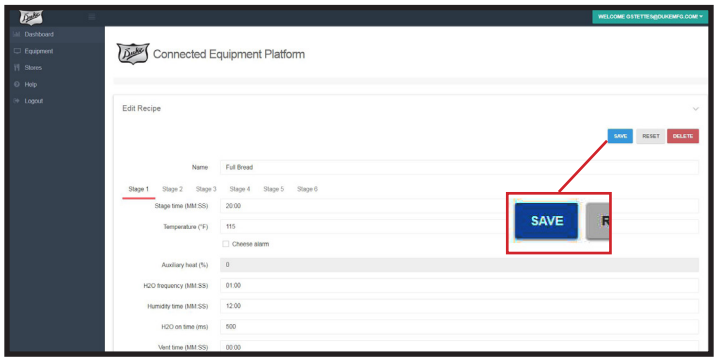

Step 4 Available recipes can be added to 'blank' buttons or can replace existing recipes on the oven. To replace Half Bread with Full Bread / Cheese from the available recipes list, select **REPLACE** on the Half Bread Stored Recipe. Select **Full Bread / Cheese** from the drop down list and then select **SAVE**.

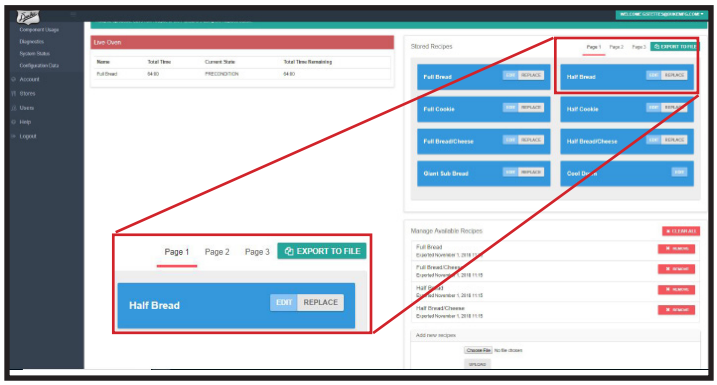

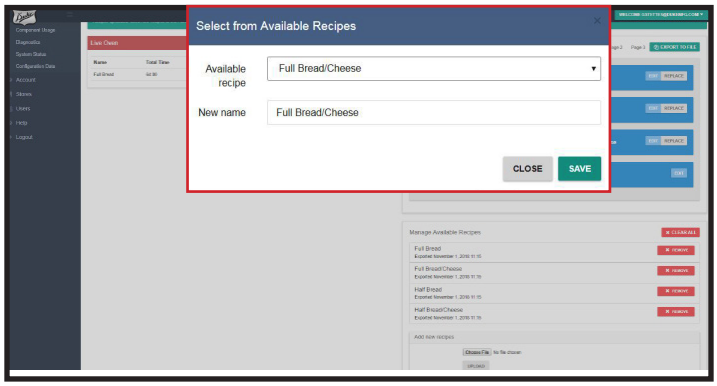

CONNECTED OPERATION AND AVAILABLE FEATURES - continued

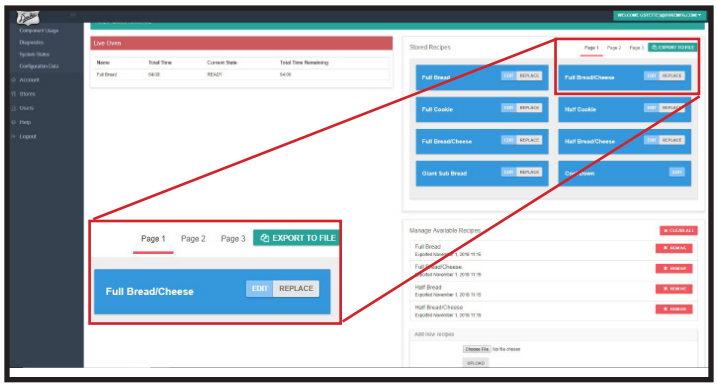

Step 5 EXPORT TO FILE allows you to export the full recipe set or individual recipes in the unit to a file by selecting them from a drop down list. The exported file will be saved in your computer's or other smart device's download folder. The file name will be of the following format: flexbake5_recipes_YYYYMMDDHRMMSS.json.
This file can then be shared, for example with other stores.
To export a file, select **EXPORT TO FILE**, select the recipes you want to export from the drop down list, and select **EXPORT**.

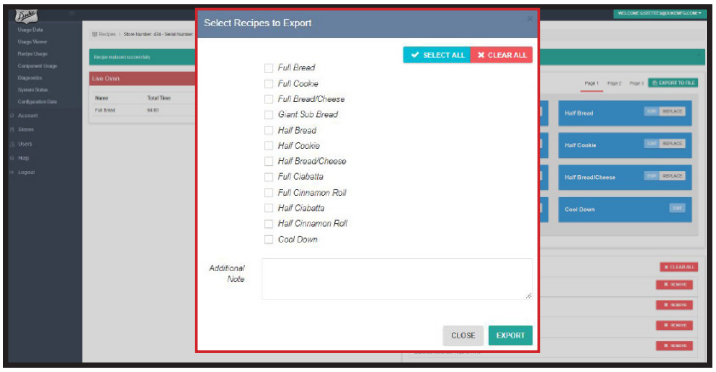

Step 6 To UPLOAD recipes from an available exported **.json** recipe file, select Choose File, browse to the file's folder location and select the recipe file.
NOTE: This must be an exported **.json** file from the Duke Connected Equipment Platform Web App.

Once it is selected, the file name will be displayed on the Web App adjacent to the Choose File button. Select **UPLOAD** and the recipes will be loaded and appended to the Manage Available Recipes list. In this example below, the **.json** recipe file contained recipes named **Full Bread, Full Cookies and Half Bread/Cheese**. As you can see, these 2 recipes have been appended to the list and the detail text description shows the exported date and time stamp. Additionally, the Web App appended (1) to the recipe names to differentiate them from the existing recipes of the same name in the Manage Available Recipes list.

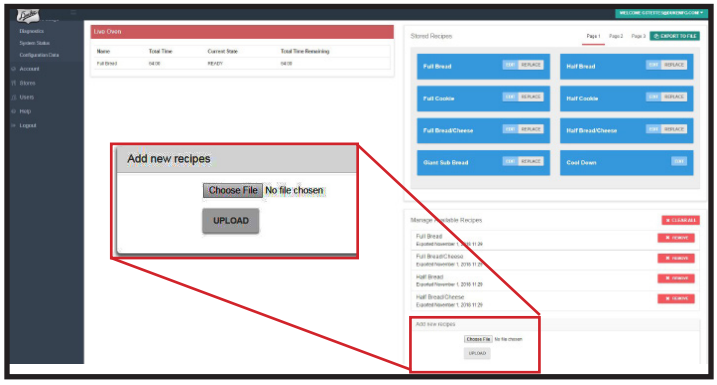

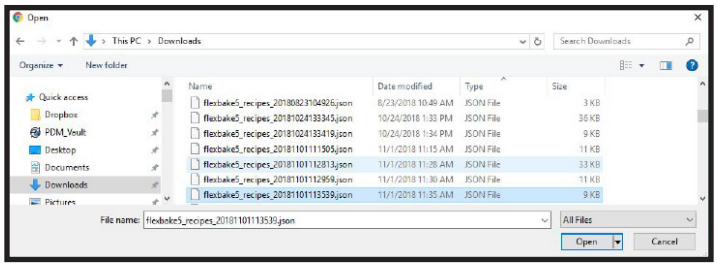

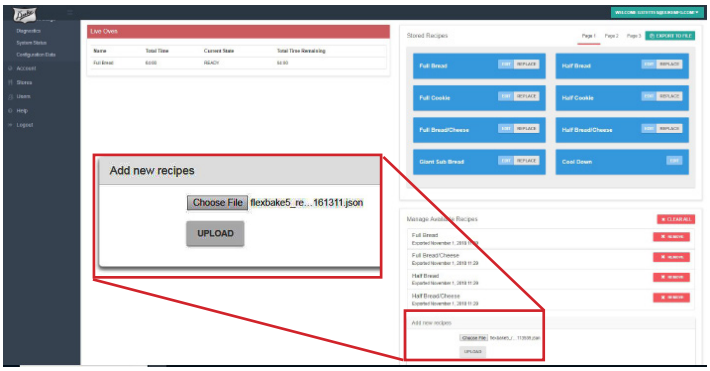

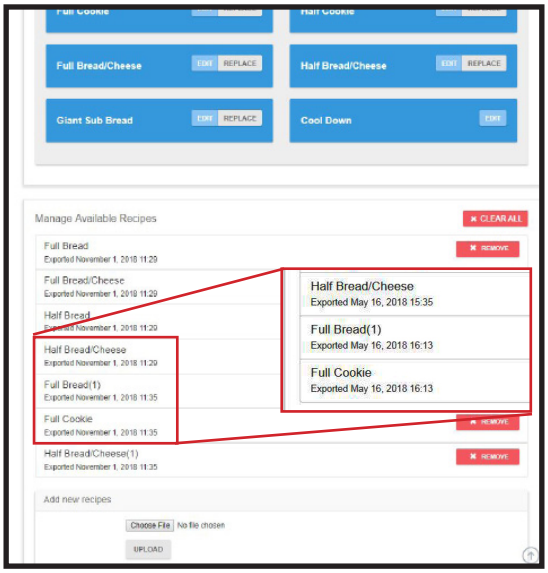

Step 7 Recipes in the Manage Available Recipes list may be removed from the list by selecting the REMOVE button adjacent to the recipe or CLEAR ALL button.

CONNECTED OPERATION AND AVAILABLE FEATURES - continued

VIEWING OVEN STATUS, USAGE DATA, AND DIAGNOSTICS

Oven status, usage data, and diagnostic information can be viewed remotely via the Web App. This information may be used to view and understand the oven's real-time status, user selected configuration settings, recipe usage behavior and associated events, component usage, and real-time diagnostic fault status.
In the left hand master menu, there are several menu options available to you. These are further described below.

EQUIPMENT DASHBOARD – This page displays the Live Oven status dashboard including the Name of the active recipe, Total Time of the recipe, Current State, Total Time Remaining of the recipe. Additionally, active alarms and reminders are displayed on this page such as; Cheese Alarm, Door Open, 20 min Reminder, 2 min Alarm, +5 Proof Alarm, etc.

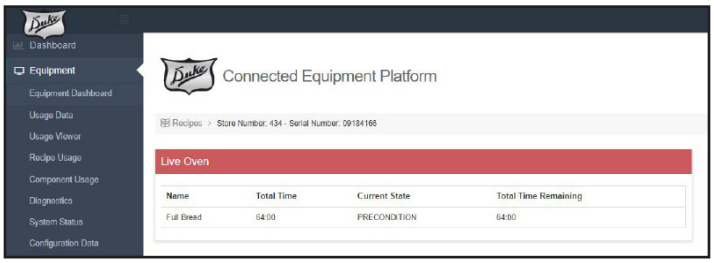

USAGE DATA – This page displays the ovens total recipe counts by Recipe Name, both in a usage table and a visual graph, for a. Total Counts (life of oven), b. resettable counts, and c. over the last 24 hour period. This data is a quick view summary of the above that can be used to analyze operations behavior.

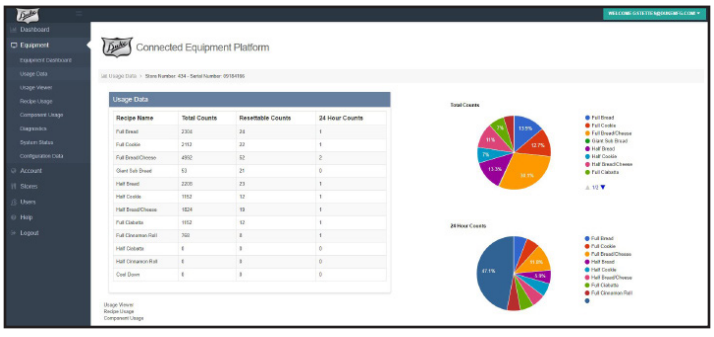

USAGE VIEWER – This page displays a time based event usage view, including Event Time, Event group, and Events (occurred within the Event group). The Events field when selected expands to provide a list of detailed events that occurred within the Event group. This provides a more detailed time stamped history log to complement the above Usage Data. The events records includes oven states (for example; preheat, start recipe, proof, bake, complete recipe, etc.), recipe edits and changes, events triggered (for example; door cycles, cheese alarms, +5 min alarm, add +5 min to proof, add +1 min to bake, etc.), and specific events of interest such as; faults. This information is very useful to understand operations behavior, operations compliance, and troubleshooting.

For examples;

a. The actual baking behavior can be studied; when was a recipe used, what recipe was used, how many times was it used, what sequence were the recipes used, was the recipe canceled, did the operator open / close the door, did they select additional time (+1 min), etc.
b. It can also be studied for troubleshooting. This provides a history log of key user inputs and important diagnostic monitoring data.

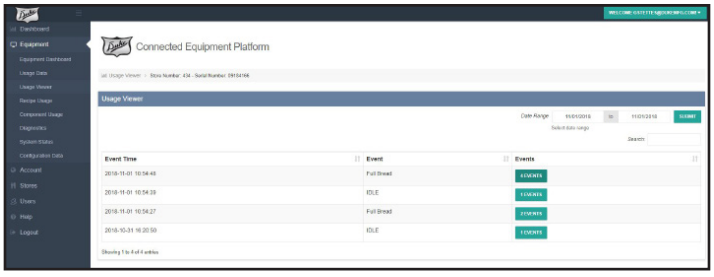

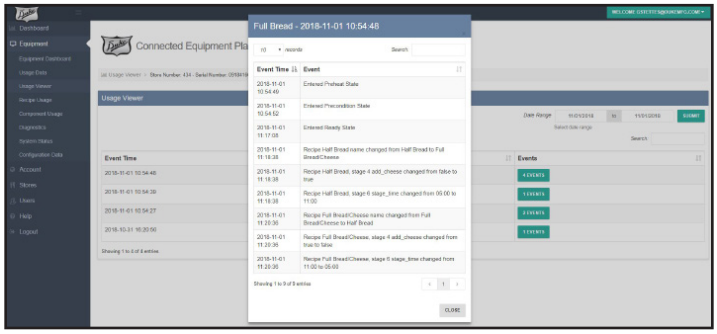

CONNECTED OPERATION AND AVAILABLE FEATURES - continued

RECIPE USAGE – This page, similar to the Usage Data, displays the ovens total recipe counts by Recipe Name in a usage table a. Total Counts (life of oven), b. resettable counts, and c. over the last 24 hour period. Additionally, it provides the capability to individually RESET the counts by Recipe Name line item. This may be useful to monitor the Resettable Counts since a Recipe Edit or a Promotion period, etc.

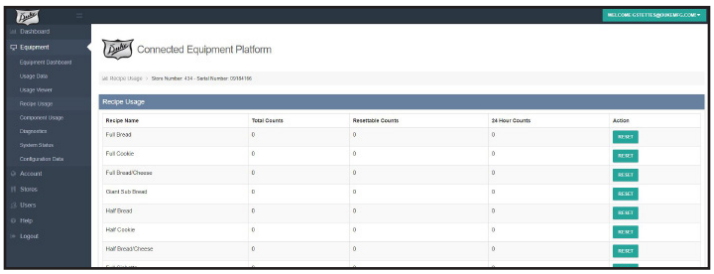

COMPONENT USAGE – This page displays the individual omponent item hours and counts. This enables building a data base per oven per component for total run time and counts. The resettable fields are used when a particular component is serviced / replaced. Over time, this will allow us to correlate application component life with our internal reliability testing to better predict life expectancy and build a preventative maintenance plan to minimize unexpected downtime and potential operations disruptions.

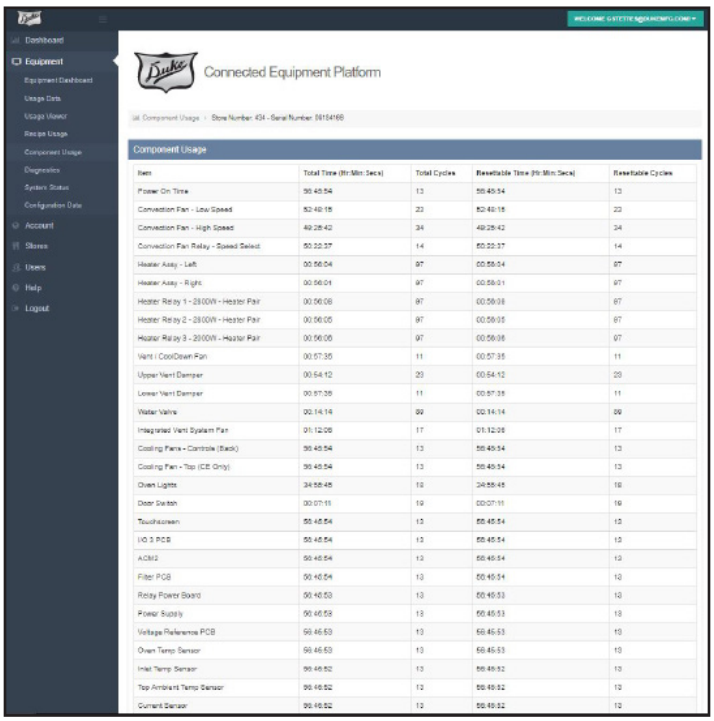

DIAGNOSTICS – This page displays the diagnostic fault status of all monitored components and performance. These faults are viewable on both the oven touchscreen and the Web App. Selecting VIEW DETAILS, when a fault is detected and shown as a red dot in the Status field, displays a fault message with a more detailed description. This message also includes instruction to clear the fault and if it reoccurs, further details of the fault and likely failed component to communication to the service provider to better ensure an efficient repair.

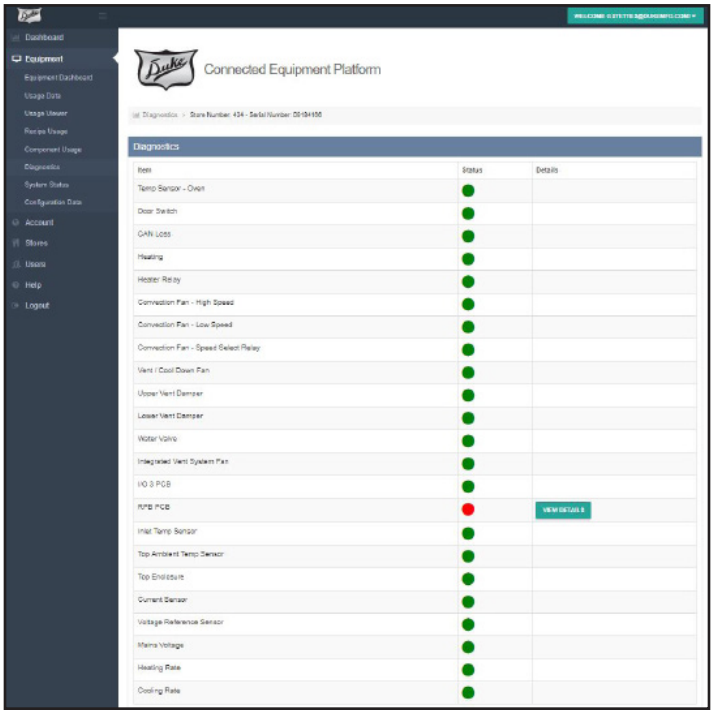

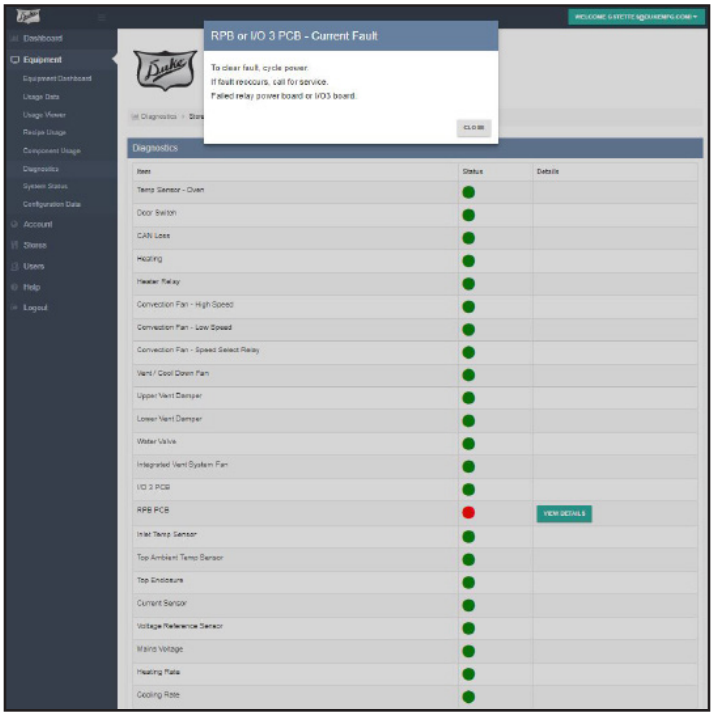

CONNECTED OPERATION AND AVAILABLE FEATURES - continued

SYSTEM STATUS – This page displays the real-time oven status for component, sensor, and network status.

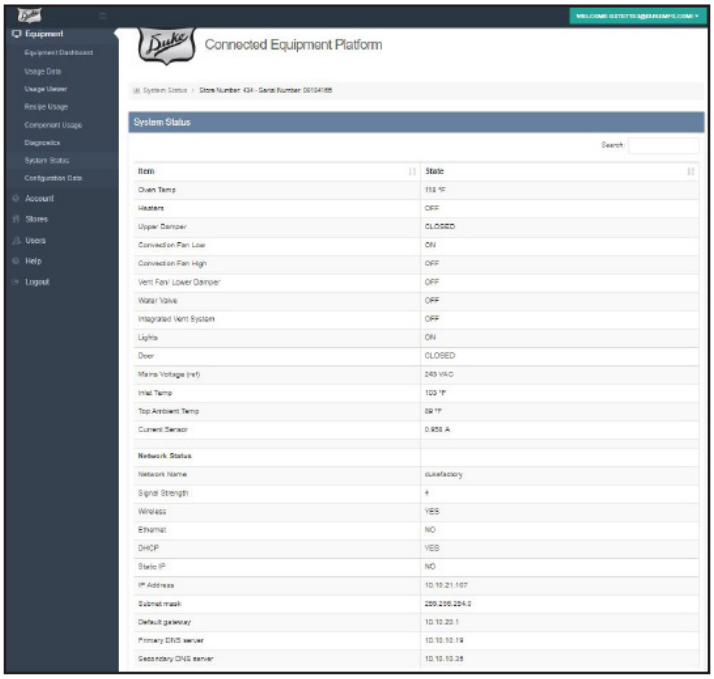

CONFIGURATION DATA – This page shows all the selected configurations of the oven including messaging and alarms that are enabled / disabled. This will also show the manufactured unit voltage configuration of the oven and the current software versions.
This provides real-time information to help troubleshoot a number of potential operational questions / issues.

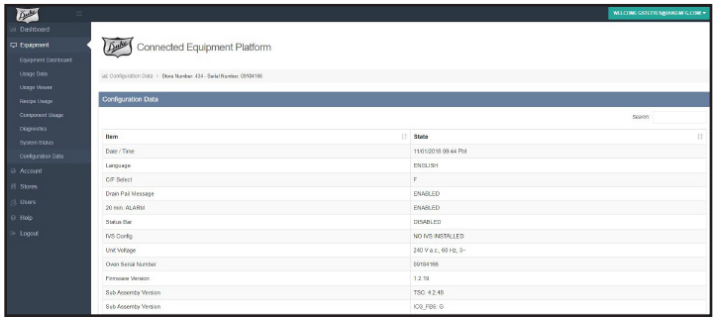

REMOTELY RECEIVE FIRMWARE UPDATES

With your unit connected to the Duke Connected Equipment Platform (CEP), you are assured that the most current firmware version and features are available. When the unit is online, it will compare its current loaded version to the latest version available via the Duke CEP. If it is an older version, the update will be pushed to the unit and saved in local memory ensuring no disruption to the unit or store operations. Once the firmware file is available, a pop-up message will be displayed on the unit. If the unit is in an active recipe, the pop-up message will be delayed until it is completed. To initiate a firmware update, turn the oven OFF and ON to install with the Control Power Switch on the front panel. If you don't want to update now, press LATER and resume normal oven operation. The update may take up to 5 minutes to complete and will flash the message below while updating. Note: The firmware update will be installed the next time the oven is turned off and on.

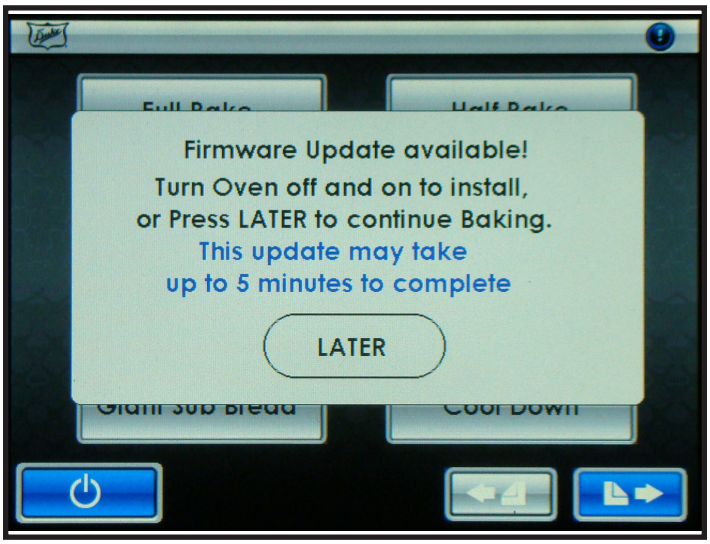

Figure: Update Screen

Figure: Update in Progress

FB5 NETWORK TROUBLE SHOOTING (FAQ)

1. Are there any prerequisites in order for me to connect the equipment?

a. The FB5 has capabilities with both WiFi and Ethernet networking. When you connect the FB5 to a local area network (LAN) using either of these modes, the FB5 will attempt to connect to the cloud. If you have a network firewall in use in your location, please be sure to allow (whitelist) the following rules for the FB5 and the Duke Connected Equipment Platform website.

URL	Port	Protocol
connected.dukemfg.com	443	TCP
iot.connected.dukemfg.com	443	UDP/TCP

b. If you operate a restrictive content filter on your premise for controlling access to Internet Content, we request that you whitelist traffic to the following URL for access to the Duke Connected Equipment Platform.

URL
https://connected.dukemfg.com

2. I've created an account and set up my oven. How do I connect to the internet? (Ethernet/Wireless) (Refer to Owner's Manual for detailed instructions, PIN codes and screen navigation).

a. Go to the Special Functions CONFIG menu and select NETWORK CONFIG.
b. Select either Ethernet or Wireless.
   i. If Ethernet, simply connect the CAT5 cable, press the ETHERNET button, and press the green SAVE button.
   ii. If wireless, press the WIRELESS button, select your NETWORK NAME from the list, enter in the password, then press the green SAVE button.

3. I've connected to my router, but I can't connect to the cloud. How can I resolve this?

a. Make sure any content filters in use have the Duke Connected Equipment Platform URLs whitelisted.
b. Make sure any network firewalls in use have port 443 for TCP protocol enabled to allow for outbound internet traffic to the Duke Connected Equipment Platform.
c. If using a guest wireless network, check to make sure it does not utilize web authentication. (e.g. Hotel guest WiFi, coffee house guest WiFi, or time limited hotspots, etc.)
d. Check if your wireless internet is working by using another device such as a mobile phone.

4. Why can't I connect to my wireless router when other devices are connected?

a. Go to the Special Functions CONFIG menu and select NETWORK CONFIG. Select WIRELESS to conduct a scan and see if any available networks are displayed.
b. The FB5 has 802.11 b/g/n WiFi capabilities which operate on the 2.4GHz wireless spectrum. Check to see that your Wireless access point has support for 2.4GHz wireless. It is possible you are running a 5GHz only wireless access point.
c. If you see an error on the main screen toolbar; CAN ACM CONNECTION LOST, call for service.

5. Why can't I connect to my wireless router when no other devices are connected?

a. Check to make sure that a new wireless access point / router was not installed.
b. Check that the wireless access point (router) is powered on.
c. Check to ensure that wireless password (or security key) has not changed since initial configuration.

6. How do I know if the unit is successfully connected?

a. On the main screen of the FB5, the top left corner has a radio dot that is either green or is grayed out. If you have successfully connected, it will be green. Alternatively, you can go to the Special Functions USER menu and select NETWORK STATUS to view connectivity status.
b. Connectivity for the FB5 (for both WiFi and Ethernet connections) is determined by local in store connectivity to the router and cloud connectivity to the Duke Connected Equipment Platform.
   iii. For local in store connectivity to the router, you can go to the Special Functions USER menu and select NETWORK STATUS to view connectivity status.
   iv. For cloud connectivity to the Duke Connected Equipment Platform, you can go to the Special Functions USER menu and select NETWORK STATUS to view connectivity status. Alternatively, on the FB5 main screen there is an always present status indicator, telling you the connectivity status to the Duke Connected Equipment Platform.

FB5 NETWORK TROUBLE SHOOTING (FAQ) - continued

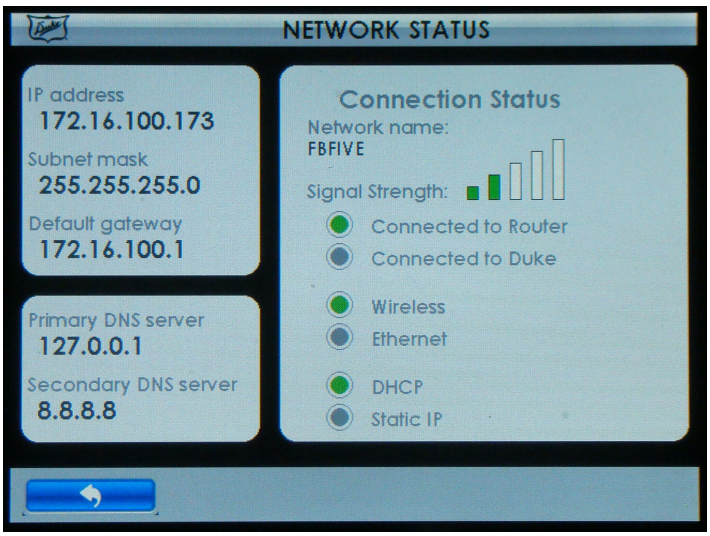

7. I know I have a wireless access point, but I can't see it on the FB5. Why?

a. The FB5 has 802.11 b/g/n WiFi capabilities which operate on the 2.4GHz wireless spectrum.
b. Check to see that your Wireless access point has support for 2.4GHz wireless. It is possible you are running a 5GHz only wireless access point.
c. Please ensure that your wireless access point includes support for 802.11 b/g/n 2.4GHz wireless.

8. Why would I want to use a static IP address?

Statically managing IP addresses adds an extra layer of security to your network by offering more control.

9. Who assigns a static IP address at a customer location?

Typically, an I.T. group at your location would give you a static IP address to use. If you do not have an I.T. group, you may have to work with your franchisee's outside I.T. vendor.

10. How do I set a static IP address on the FlexBake 5?

Go to the Special Functions CONFIG menu and select NETWORK CONFIG. Select your type of connection (WIRELESS or ETHERNET) and then select ADVANCED. Enter the relevant network information by touching on the octet and entering values via the number pad. When complete, remember to press the green SAVE button.

11. How do I handle an apparent intermittent connection?

a. If utilizing static IP addressing, you might have a conflicting IP address. To resolve this, you can switch to DHCP to see if you can retrieve a non-conflicting IP address. If DHCP is not available, you should contact your I.T. resource to perform a network scan to check for devices with conflicting IP and MAC address pairs.
b. If utilizing the Ethernet connection, check for a damaged cable, a loose cable connector, or a damaged panel mount Ethernet port connector.
c. If utilizing WiFi, check the signal strength.

12. How do I know if I am set for DHCP or Static?

Go to the Special Functions USER menu and select NETWORK STATUS. The radio button at the bottom will indicate if the unit is DHCP or static. The unit will default to DHCP.

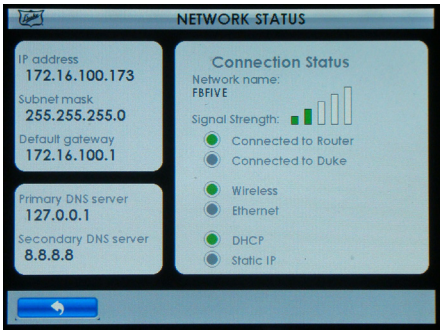

13. How do I know what my currently assigned IP address is?

Go to the Special Functions USER menu and select NETWORK STATUS. Your IP address will be displayed on the top left.

FB5 NETWORK TROUBLE SHOOTING (FAQ) - continued

14. What types of wireless security are compatible with the equipment?

WEP, WPA, WPA2, and the majority of others.

15. How do I view my signal strength?

Go to the Special Functions USER menu and select NETWORK STATUS.
Your signal strength will be displayed nd represented by the green bars.

16. I've accidently set it for static, how do I revert back to DHCP?

Simply reconnect to your wireless access point (router) or Ethernet option. Go to the Special Functions CONFIG menu and select NETWORK CONFIG. Select your type of connection (ETHERNET or WIRELESS) and press the green SAVE button. This will default the unit back to DHCP.

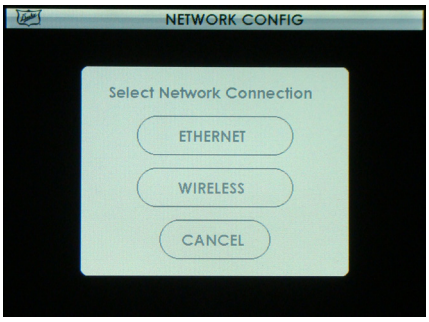

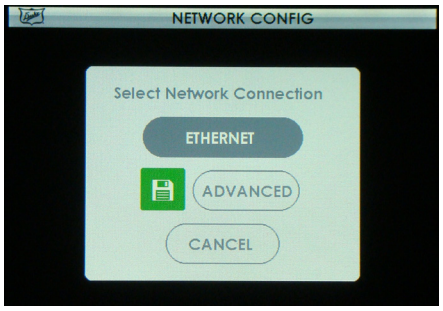

or

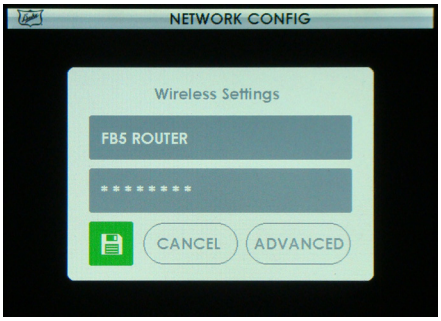

17. I was connected yesterday, I didn't change anything, and now I'm not connected, why?

a. Review and check FAQ #5
b. Review and check FAQ #6
c. Check for any fault messages on the unit. (e.g. CAN ACM Connection Lost)
d. If you are connected to the in store router but you cannot establish connection to the Duke Connected Equipment Platform, your internet service might be down. On another connected device to the same network, check to see if you can browse to an internet site.

18. Why would I want to connect using Ethernet?

If a wireless network is not available or reliable, the FB5 provides an alternate connectivity option via Ethernet.

19. How do I deal with a spliced or chopped Ethernet cable?

If connected with Ethernet, replace the cable.

20. My oven is connected, but my signal strength is really low, why?

The quality of your signal strength is dependent on several factors;

a. Significant obstructions to the wireless signal
b. Distance between the oven and the wireless access point
c. Variances between wireless access point manufacturers
d. High density WiFi locations (e.g. dense retails locations)
e. You may have obstructions between the oven and the wireless router. Also, depending on the wireless router you have and the distance between the oven and the router, you will see a significant signal drop the further you are from the router. You can either purchase a longer range router or install a Wi-Fi extender. Contact your I.T. representative for further information.

TROUBLESHOOTING

Problem	Yes	No
1. Touch Screen Control display is not ON		
a. Is the control panel power switch ON	Go to "b".	Turn on switch.
b. Is the main circuit breaker tripped?	Reset Circuit Breaker. Try oven again.	Call Duke Service.
2. Oven lights not working.		
a. Is more than one light not working?	Replace inoperative light bulbs and recheck. Go to "b".	Replace inoperative light bulb and recheck. Go to "b".
b. Do lights work?	Troubleshooting complete.	Call Duke Service.
3. Oven does not heat but Touch Screen Control and lights are ON.		
a. Is a recipe selected?	Go to "b".	Select Recipe
b. Is the oven door securely closed	Go to "c".	Close door securely.
c. Does the oven fan work?	Call Duke Service.	Call Duke Service.
4. Oven does not cool down in approx. 10 minutes with CoolDown selected.		
a. Does the oven fan work?	Go to "b".	Call Duke Service
b. Is the water supply to the oven on?	Call Duke Service	Turn water supply on. Go to "c".
c. Does oven cool properly?	Troubleshooting complete.	Call Duke Service.

A Manually reset high temperature safety limit is provided on the right side of the control section of the unit to protect the oven elements. The high limit will not trip under normal operating conditions. Should the oven high limit trip, push the RESET button. The high limit will reset with a "click" if an over temperature trip occurred. If condition persists, call Duke Service.

HIGH LIMIT PROTECTOR FOR OVEN ELEMENTS

LOACTED ON RIGHT SIDE OF CONTROLS SECTION

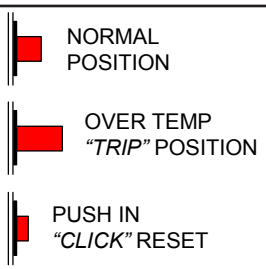

WIRING DIAGRAM

FOR QUALIFIED SERVICE TECHNICIAN OR ELECTRICIAN ONLY

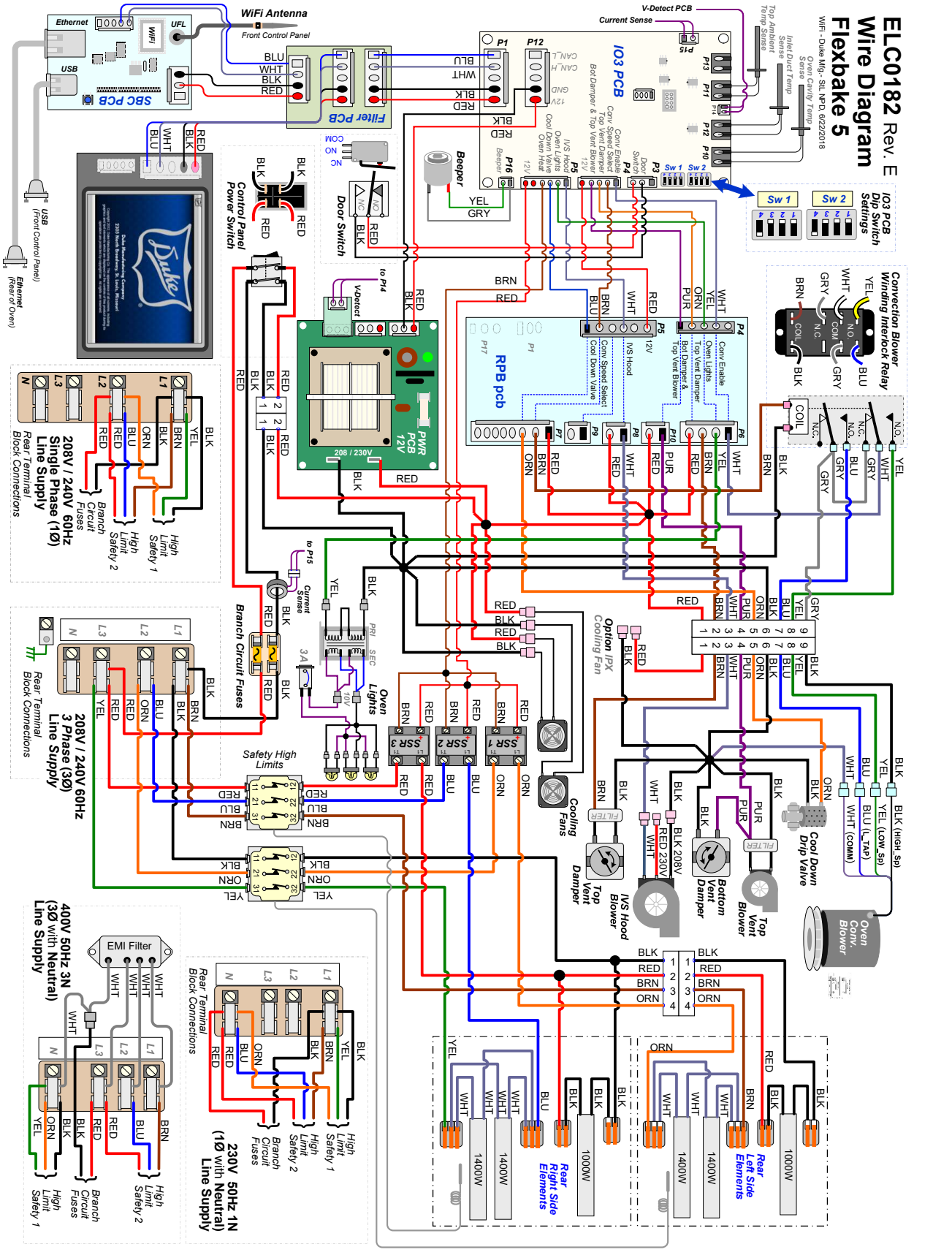

Duke Manufacturing Co.
2305 N. Broadway
St. Louis, MO 63102

Phone: 314-231-1130
Toll Free: 1-800-735-3853
Fax: 314-231-5074

www.dukemfg.com